SKF products for engine drive

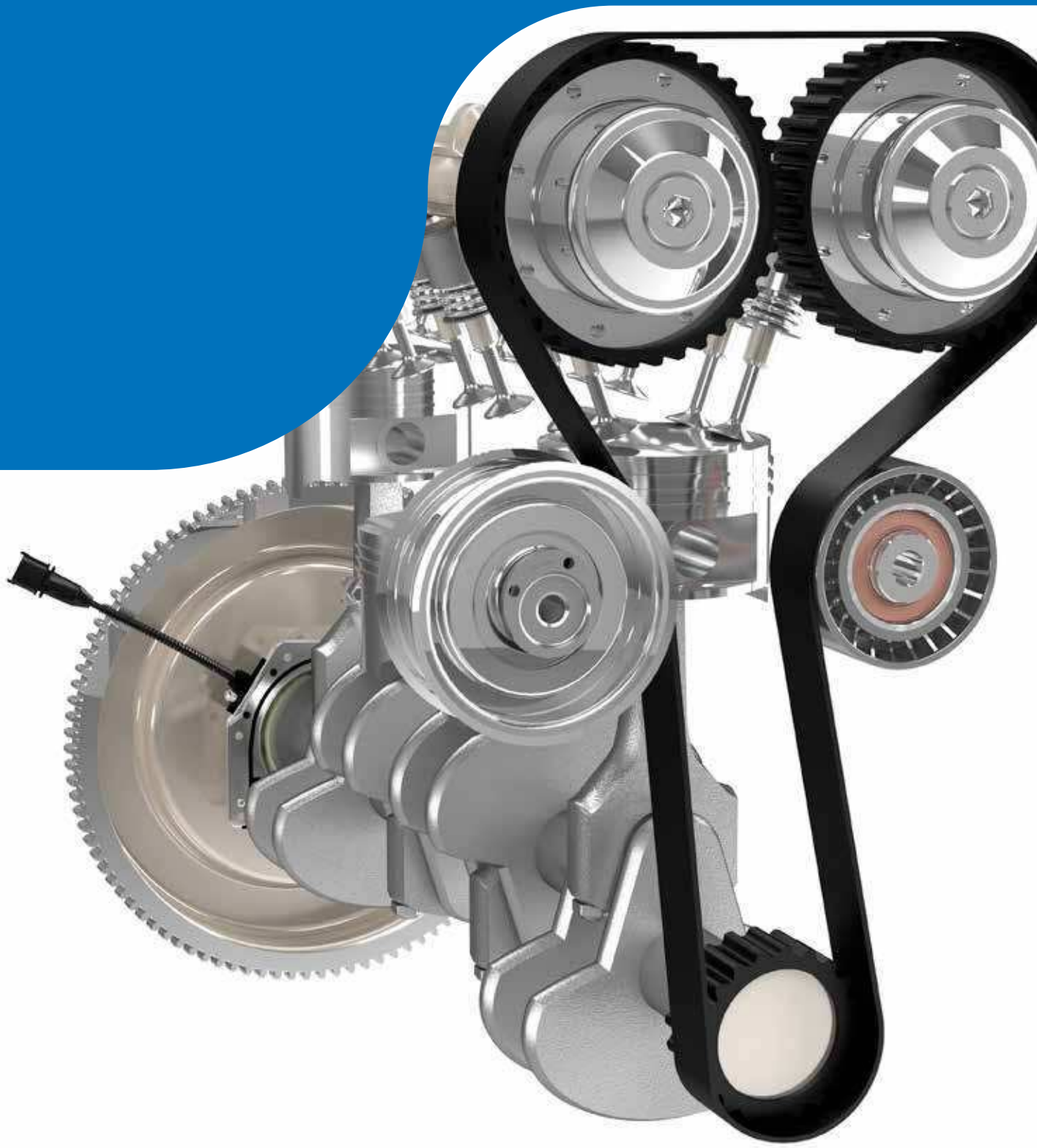

Contents

The SKF brand now stands for more than ever before, and means more to you as a valued customer.

While SKF maintains its leadership as a high-quality bearing manufacturer throughout the world, new dimensions in technical advances, product support and services have evolved SKF into a truly solutions-oriented supplier, creating greater value for customers.

These solutions enable customers to improve productivity, not only with breakthrough application-specific products, but also through leading-edge design simulation tools and consultancy services, plant asset efficiency maintenance programmes, and the industry's most advanced supply management techniques.

The SKF brand still stands for the very best in rolling bearings, but it now stands for much more.

SKF – the knowledge engineering company

1 Product information

Foreword 3

Global presence of SKF engine bearings 4

Introduction: belt timing drive 5

SKF products for engine drive solutions 6

Automatic belt tensioner units 8

Static belt tensioner units 9

Double row idlers 10

Bearings 11

Application data sheet 12

2 Product data

Automatic belt tensioner units 13

Static belt tensioner units 13

Idlers 15

Bearings 16

Product designs 19

3 Customer engine references

Automatic belt tensioner units 37

Static belt tensioner units 38

Idlers 41

Installing confidence for more than 100 years 46

Foreword

This catalogue provides an overview of the SKF offerings of belt drive products covering SKF tensioners, idlers and engine drive ball bearings. SKF bearings have been developed to be used in idlers and tensioners and are also applied in many other applications. Our designs and solutions allow us to use standard SKF bearings to support virtually all of our customer's requirements.

Our catalogue shows the SKF current product range, which includes the following:

- Automatic belt tensioner units
- Static belt tensioner units
- Idlers
- Bearings

You can easily make your first choice by selecting products in the index tables (→ **pages 13–18**) showing the overall dimensions of each product. An image of the selected product is also shown. (→ **pages 19–36**).

If your choice is not available, please contact your nearest SKF representative for further information. An SKF data sheet (→ **page 12**) enables us to offer you the best possible solution.



Typical SKF products in a belt drive

Design flexibility

SKF offer customized solutions to meet specific application requirements and customer needs. As part of this support, a comprehensive range of SKF data sheets is available, that enables our team to provide you with an optimized proposal.

We hope you find this catalogue useful, and welcome your feedback as part of our process of continuous improvement.

Global presence of SKF engine bearings

SKF has a truly global presence to support our customers worldwide. We have nine manufacturing centers throughout three regions, comprising Europe (Italy, France, Germany and Bulgaria), South America (Argentina and Brazil) and Asia (China, India and Indonesia) as well as technical centres and R&D centres in a variety of locations.

SKF engineering support for engine applications is located worldwide, with a Centre of Excellence in France and application centres and laboratories in China, India, Europe and USA.

Engineering centers for engine, centres are also supported by the SKF Group's main research and development centres located in Sweden and the Netherlands, as well as technical centres in North America, China, India and Japan, which provide support in the form of laboratory investigation and testing facilities.

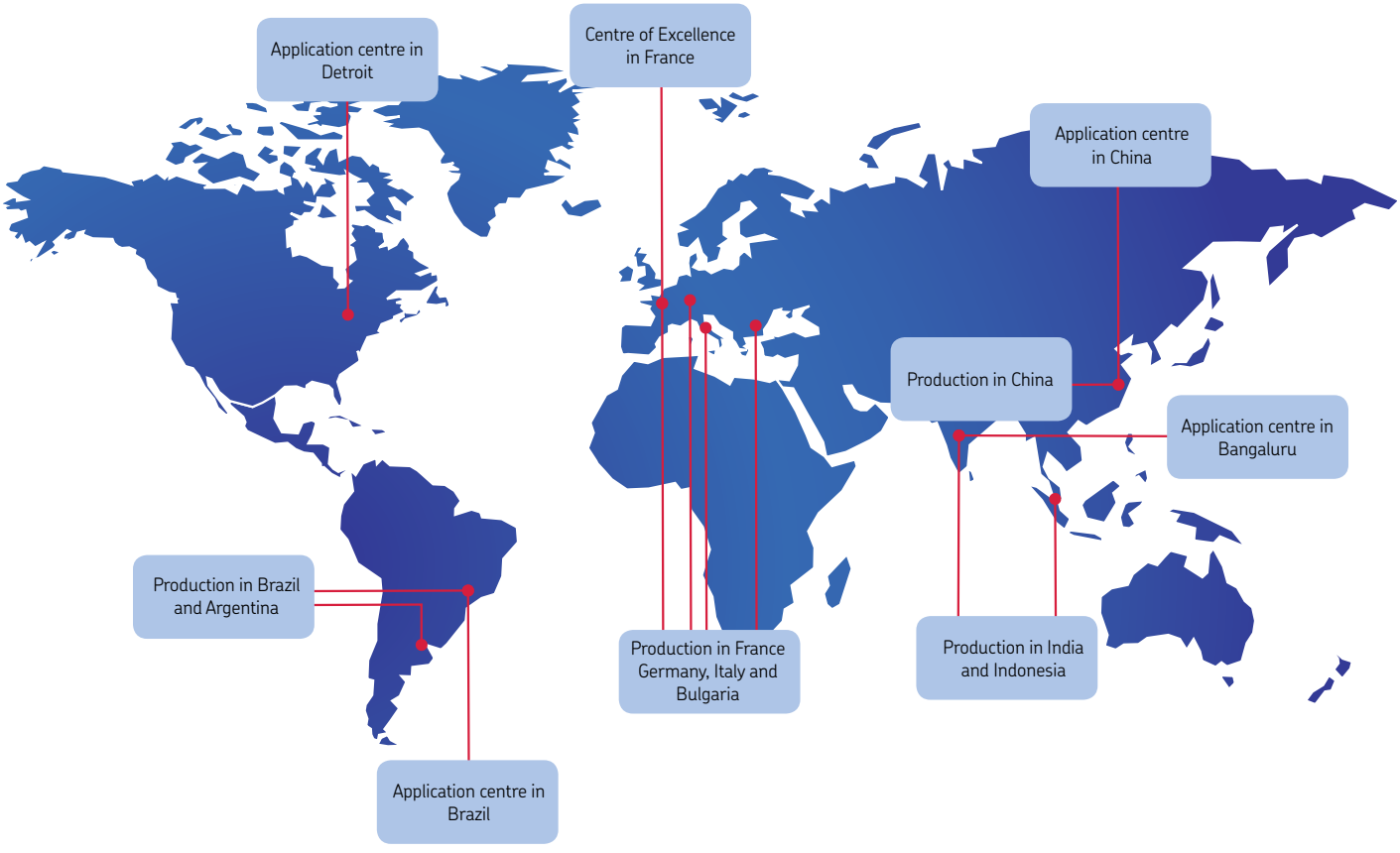

Introduction: belt timing drive

Belt timing or cam systems were first introduced in 1945, but became more popular when overhead camshaft engines were introduced. Today, this is one of three options for driving the crankshaft and camshaft in perfect synchronisation, and has been widely adopted by most leading car engine manufacturers. The camshaft actuates the valves, such as intake and exhaust.

The two other options are chain- and gear-driven designs, although gear drives are more widely used in heavy duty applications. The belt drive is an established and popular solution with engine designers due to its many distinct advantages over chain drive, such as:

- **Greater efficiency**
- **Less vibration**
- **Quieter operation**
- **Less weight**
- **Lower cost**
- **High design flexibility**

In fact, there is evidence that by adopting a belt drive solution, the customer will benefit in terms of fuel economy and reduced emissions.

SKF was an early pioneer of belt tensioner design and today we are one of the world's leading suppliers to major OEMs.

SKF solutions can provide you with the most up to date technology in belt tensioner and idler units, and with the latest developments in low friction bearings, all to help you achieve your optimized drive design.

By choosing SKF as your partner in engine solutions, you can have the very best combination; local service from the global leader in bearing technology.



SKF products for engine drive solutions

Design features

Bearings

Engine drive products are exclusively equipped with low friction SKF single- or double-row ball bearings, which are available with extended inner and/or outer rings.

- Double-row ball bearings are mainly used in high load applications and when accurate belt guidance is required. Double-row ball bearings offer a robust solution for the belt drive, both being capable of carrying high loads and being resistant to misalignment.
- Single-row ball bearings are used in applications that are subject to lower loads and less sensitive to misalignment. The single-row ball bearing still offers robustness while being more compact.

Lubrication and sealing solutions

All SKF bearings are greased and sealed for engine service life, preventing lubricant leakage and internal contamination by the use of efficient seals. Our greases and seals are optimized for applications with outer ring rotation and are selected to meet high speed and high temperature requirements, providing the driven units with a long service life under severe conditions.

The sealing solution is specifically adapted to the bearing application. For example, the sealing solutions used in timing drive applications are not the same as those in accessory drive applications, which normally have higher requirements for sealing effectiveness and corrosion protection from being subjected to a harsher environment. Care must be taken, therefore, if using a bearing optimized for one application in another application.



Automatic tensioner endurance test rig



Idler endurance test rig



Light optical microscope and image acquisition system



Binocular microscope

Pulleys

SKF pulleys can be made of different material depending on the application requirements. The pulleys can be made of steel, either integrated in the bearing outer ring or a separate mounted pulley. They can also be made of over-moulded polyamide or sheet metal.

The pulleys are made of premium quality materials in steel or glass-fiber-reinforced polyamide.

- Steel pulleys have long-proven robustness and are selected for applications with:
  - high belt loads
  - compact design

– belt compatibility problems with other materials

The steel pulley is either integrated in the bearing outer ring, or a thin steel pulley pressed on the bearing outer ring. The steel pulley is not suitable for large pulley diameters.

- Steel sintered pulleys offer similar advantages to steel pulleys, but permit larger diameters and lower weight combined with greater design flexibility, as compared to a machined steel pulley.

- Sheet metal pulleys are used for high loads and for large pulley diameters. Compared to the steel and sintered pulleys, they are suitable for slightly lower loads, but can be adapted for larger outer diameters. Guiding flanges can easily be integrated in the steel pulleys.

- Polyamide pulleys are made of polyamide reinforced with glass fibers. They can be adapted both for small and large pulley diameters and are suitable when the loads do not require a steel pulley or there are no compatibility problems with the belt.

  The polyamide pulleys offer a light-weight, robust and flexible solution.

Calculation and testing

All the engine drive products are developed by the SKF Centre of Excellence in St Cyr sur Loire in France. Calculation tools are specifically developed to optimize our design and propose the ideal solutions to meet our customer needs.

Simulation tools

- Bearing lifetime estimations are made using advanced simulation tools and fatigue models. Bearing contact stresses and load distribution are simulated, taking into consideration the application duty cycle, such as loads and speed variations, bearing internal geometry and bearing clearance. The bearing lifetime estimates are based on a full integration of the rolling element contact stresses.
- Finite Element Analysis is performed on polyamide pulleys to ensure an optimized design regarding operating conditions and material.
- To optimise installation and tensioning properties, SKF dedicated software for automatic tensioner design takes into account the engine layout, thermal expansion, engine tolerances, etc.

Metallurgy and chemistry laboratory

The teams working in our laboratories support the widening of SKF technical knowledge in areas relating to: materials, surface heat treatments, coating and lubrication.

We are able to perform different analyses and investigations, measurements and testing so that SKF continues to meet customer requirements.

Product testing and measurements

The test laboratory is responsible for validating the products according to specification. For that purpose, we have a modern laboratory, well-equipped with test rigs for measuring things such as bearing high speed, high temperature and high loads, tensioner bushing wear, and pulley shock.

Our data sheet on page 12 enables customers to provide us with information so that we can propose an optimized SKF design.

SKF solutions are optimized by simulations and validated by specific tests which demonstrate their capacity for enduring high loads throughout the engine service life.



Automatic belt tensioner units for timing drive

Automatic belt tensioner unit for use in automotive belt drive applications

The primary function of the timing belt drive is to enable a synchronisation between the crankshaft and camshaft. The automatic belt tensioner unit maintains a constant belt tension, ensuring reliable and efficient operation. This permits ideal engine performance. The tensioner unit must provide a precise belt tension control, minimise transmission error, and protect against "tooth jump" and its resulting loss of timing drive synchronization which could lead to severe engine damage or failure.

SKF's tensioner units are designed to provide a precise belt tension control for optimum belt life and minimised drive noise throughout the entire operating range of the engine. This is achieved through accurate damping and spring control tuned to the requirements of each specific engine.

All tensioners are equipped with low friction ball bearings from SKF, greased and sealed for engine service life. The grease and seal are selected to fulfill high temperature requirements.

SKF's belt tensioner units are designed to last the entire service life of the engine.

Applications

The SKF mechanical dry-friction tensioner is optimised for belt timing drive applications.

SKF's automatic belt tensioner unit offers a precise belt tension control throughout the operating range of the engine and the service life of the belt.

SKF has been producing belt tensioner units for over 30 years and we are committed to providing optimized system improvements to our customers.

Our extensive know-how in timing drives, together with our experience, and our in-house-developed timing drive system analysis and design software, makes SKF the ideal partner for developing optimised solutions for belt timing drives.



Automatic belt tensioner unit

Automatic belt tensioner units



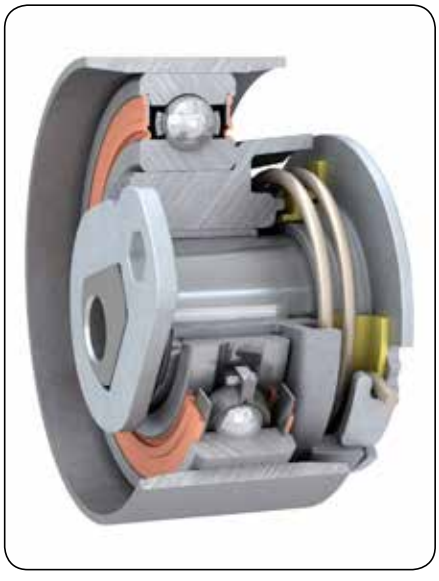

Static belt tensioner units

Static belt tensioner units for elastic or classic belt drives

Static tensioners have basically the same functionality as automatic tensioners, except that static tensioners cannot dynamically adjust the tensioner to compensate for temperature and dynamic variations.

The static tensioner offers easy installation, compensates for all tolerances in the belt drive, and sets an initial constant belt tension. The static belt tensioner offers a cost-efficient alternative to the automatic tensioner for elastic belt drives and less demanding applications.

Tension adjustment is enabled during the mounting phase, thanks to the following systems:

- An eccentric located on the tensioner
- A rectangular hole located on the rear plate of the device

We also need to consider high belt loads and high temperatures caused by the engine environment. To meet the demands under these conditions, SKF offers a wide range of tensioner units with single- or double-row ball bearings, greased and sealed for engine service life, that ensure low friction during their lifetime.

Applications

SKF tensioner units are applied to timing belt drives.

Key design features

- High load capacity ball sets
- Single- or double-row ball bearings
- Ball bearings greased and sealed for engine service life
- High precision pulleys

Benefits

- Smooth and quiet operation
- High load applications
- Low friction
- Long engine service life
- Flexibility of design
- Prevention of lubrication leakage
- Long service life under severe conditions

Static belt tensioner units



The SKF Static belt tensioner unit offers:

Reliable static belt tension and guidance during the complete engine service life.

SKF has been producing belt tensioner units for over 30 years with a commitment to providing customers with continuous improvements.

Single and double row idlers

High capacity single and double row idlers for use in automotive belt drive applications

Idlers are used in belt drives to guide the belt and to allow a flexible drive layout with sufficient belt wrap angles for each driven unit.

The main challenges are meeting high belt loads and high operating temperatures. To enable the idler to fulfil the service life of the engine under these conditions, SKF is offering specially designed double row idlers that are greased and sealed for engine service life. The grease is selected to ensure maximum service life and is optimised for outer ring rotation.

Applications

- Timing belt drives
- Accessory belt drives
- Chain drives*

The requirements for these applications are basically similar, however, we need to consider corrosion protection and improved sealing arrangement for accessory drives which are normally exposed to a harsher external environment.

Timing belt drives are usually enclosed within the engine.

Key design features

- High capacity ball set
- Efficient sealing solution
- Modular design to allow customisation
- High precision pulleys
- Flexibility in pulley material
- Customized for each application requirement

Benefits

- High load capacity
- Low noise
- Improved driver comfort
- Low friction
- Reliability and trouble-free operation during service life
- Flexible solution
- Reliable performance at high temperature

SKF's robust double row idler offers excellent belt guidance with low friction during the engine's entire service life, even under severe operating conditions.

SKF has been producing belt idler units for over 30 years and this high load double row idler is further proof of SKF's commitment to continuous improvement in order to meet the needs of our customers.

Our extensive know-how in timing drives, together with our experience, our in-house-developed timing drive system analysis and design software, makes SKF the ideal partner for developing optimised solutions for engine drive bearings.



Double row idler



Double row idler with polyamide pulley

***** Chain gear idlers for chain drives where low friction properties in rolling element bearings are required.

Bearings

Ball bearings developed for use in engine drive applications

A large number of base bearings have been developed for use in SKF automatic tensioners, static tensioners, idlers and other engine applications.

Double-row bearings are most often applied, but in some cases single–row SKF bearings may be recommended.

Specific bearings have been developed for engine applications, but these bearings can also be used in other applications. However, the suitability of the bearings must be reviewed in each case with the application centre, with respect to grease, seal and clearance options.

Applications

The base bearing may be adapted to many different applications, such as timing and accessory belt drives.

For example, this may apply when the shaft and pulley is either assembled by the customer, or will be assembled locally, for things such as:

- Chain gear idlers
- Double-row bearings in general, e.g. in balancing shaft and other engine applications

Key design features

Base bearings have been developed for a variety of applications. SKF offers a wide range of robust idlers with:

- High load capacity ball sets
- Single- or double-row ball bearings
- Low friction bearings
- Bearings both with and without contact angle

In many cases, the bearings are prepared for over-moulding by having a knurling on the outer ring. Most bearings are equipped with high temperature seals, and with low or high seal interference. All sealed bearings are greased and sealed for engine service life.

Double row base bearings for engine applications



Application data sheet

Here you can provide SKF the basic information that is needed to make an engineering evaluation of the application.

Product engineering.
Application data list (minimum required) for idlers.

Note: Always indicate if data is estimated or assumed

SKF Contact
Name:
Dept.:
Tel.:
Date:

Customer:	Name: Division: Contact details:	**Application details**	Platform: Category: (car, truck, SUV, etc.) Any other details:
Final Customer:	Name:		
Customer Adress:	Address: E-mail: Tel.:	**Estimated Volumes:**	Year 1 Qty: Year: Year 2 Qty: Year: Final Qty: Year:
Customer Part Number:		**SKF Part Number:**	
Customer drawings attached: (Yes/No)		**Target price:**	
Customer Specifications (ref. + reference)	Product spec.: Drawing: Test spec.: Approval procedures: Traceability request: Critical parameters: Environmental laws: Packaging: Other:	**Requested Dates:**	Design: Quotation: Prototypes: Testing: PPAP: SOP:

Technical Data

Engine data	**SKF Estimations**	**Customer supplied data**
Engine		
Number of cylinders / valves	/	/
Displacement (cm^3)		
Fuel type		
Belt data		
Timing belt width (mm)		
Accessory poly V belt (no. of ribs ...)	PK	PK
Static belt tension (N)		
Application data		
Required service life – vehicle mileage (km) / nb of engine revolutions (MRev)	/	/
Engine drive layout		
Pulley outer diameter (mm) / width (mm)	/	/
Fixation of engine – bore diameter (mm)		
Wrap angle on idler (°)		
Centerline belt – engine (mm)		
Max load offset (mm)		
Speed ratio (idler / crankshaft)		
Operating temperature (°C) (min / average / max / peak)	/ / /	/ / /
Max dynamic radial load (N)		
Max dynamic radial load (N) vs engine speed (rpm)	N @ rpm	N @ rpm
	N @ rpm	N @ rpm
	N @ rpm	N @ rpm
	N @ rpm	N @ rpm
	N @ rpm	N @ rpm
	N @ rpm	N @ rpm
	N @ rpm	N @ rpm
Duty cycle (% of time vs engine speed (rpm))	% @ rpm	% @ rpm
	% @ rpm	% @ rpm
	% @ rpm	% @ rpm
	% @ rpm	% @ rpm
	% @ rpm	% @ rpm
	% @ rpm	% @ rpm
	% @ rpm	% @ rpm
Special requirements (pulley material, flanges, ...)		

Automatic belt tensioner units

SKF Reference	Pulley diameter	Bore diameter	Pulley width	Total width	Engine-belt center line	C (Dynamic capacity)	Application	Page number
–	mm					N	–	
307970 C	59	8,25	19	30,6	20,5	13 300	Timing	19
337083 BA	72	8,35	25,3	34,8	17,95	13 300	Timing	19
ARB-1022 B	70	8	36	61	36	13 300	Timing	19
ARB-1111 BB	72	8,25	25,3	40	25,45	13 300	Timing	19
ARB-1169 C/VK108	60	10	29	38	23,5	13 300	Timing	19
ARB-1246	60	8	24,1	54	43	13 300	Timing	19
ARB-1247	60	8,2	18,7	26,4	16,25	13 300	Timing	19
ARB-1281	60	8	18,7	26,4	16,25	13 300	Timing	19
ARB-1314	72	8	30	39,3	24,3	13 300	Timing	19
ARB-1315	70	8	30	39,3	24,3	13 300	Timing	19
ARB-1316	74	10,2	25	31,7	14,5	13 300	Timing	20
ARB-1317	59	8	32	41,5	20	13 300	Timing	20
ARB-1318	59	8,2	27	48,9	21,9	13 300	Timing	20
ARB-1319	60	8	29	36,6	22,1	13 300	Timing	20
ARB-1320	62	15,5	26,5	49,5	36,25	13 300	Timing	20
ARB-1321	59	8	32	39,5	20	13 300	Timing	20
ARB-1325	60	12	25,5	128,35	115,6	13 800	Accessory	20

Static belt tensioner units

SKF Reference	Pulley diameter	Bore diameter	Pulley width	Total width	Center line	C (Dynamic capacity)	Application	Page number
–	mm					N	–	
307972	65,33	12,4	23	47,87	35,2	13 300	Timing	21
337084	66	16	21	29,5	19,02	15 900	Timing	21
337174	59,26	10,2	23	31,25	13,2	11 200	Timing	21
337179	50	Tightening screw	30,8	60	Not indicated	17 200	Timing	21
337180	47	20,2	29	36,4	20,3	17 200	Timing	21
337188	60	8,2 (Tightening)	27,8	40,3	26,4	10 530	Timing	21
337190	60	8,025	24	31,5	19	9 360	Accesory	21

Static belt tensioner units

SKF Reference	Pulley diameter	Bore diameter	Pulley width	Total width	Center line	C (Dynamic capacity)	Application	Page number
–	mm					N	–	
337191	80	10,2	28	29,5	14,5	13 000	Accesory	21
307839 EB	72	10,25	26,5	34,6	19,65	13 300	Timing	21
307858 DB	65,33	12,4	23	56,17	43,5	13 300	Timing	22
307863 B	72	11	26,5	32,5	17,95	13 300	Timing	22
307924 DB	72	10,3	27	31,45	17,95	13 300	Timing	22
307925 AD	59	13	22	32,8	20,5	13 300	Timing	22
337042 AA	72	10,25	18,9	27,46	14,7	13 300	Timing	22
337043 AA	72	8,25	18,9	27,46	14,7	13 300	Timing	22
337103 A	72	10,2	30	32,5	17,5	13 300	Timing	22
337123 C	60	17 (Tightening)	34	45	27,92	10 530	Timing	22
337131 A	72	8,2	27	31,45	17,95	13 300	Timing	22
337141 AC	74,5	10,977	19,8	26,17	9,5	15 900	Timing	23
337154 B	100	10,2	28	28	14	13 000	Timing	23
337176 E	57	13	29	39,7	25,2	13 300	Timing	23
337185 A	55,8	10,3	32	37,8	7,5	14 000	Timing	23
362527 AD	49,5	8,4 (Tightening)	29,85	48	27,05	6 050	Timing	23
363477 BA	72	19	19	23,7	9,5	15 900	Timing	23
445787 BA	60	8,3 (Tightening)	34	43,73	26,73	9 950	Timing	23
ARB-1006 B	60	13	30	40,2	25,2	13 300	Timing	23
ARB-1097	57	26	24	33	19,25	13 300	Timing	23
ARB-1148	50	10	30,8	36,9	18,5	–	Timing	24
ARB-1238/VK9052	60	8,2 & 8,3 (Tightening)	34	45	28	10 530	Timing	24
ARB-1252/VK9052	55	8,2 & 8,3 (Tightening)	27	41,5	28	10 530	Timing	24
ARB-1259	82	10	18	26,55	12,45	10 530	Timing	24
ARB-1326	50	10 (Tightening screw)	30,8	61	26,6	11 900	Timing	24
ARB-1327	50	10 (Tightening screw)	30,8	61	26,6	11 900	Timing	24
BA2-0017 B	53	10,2	19,5	26	11	13 000	BB INT	24
BA2D 633624 BC	56	10,3 (Eccentric)	27	39,5	25	16 500	Timing	24
BA2D 633625	60	10,3	25	48	34,5	16 500	Timing	24
BA2D 633636 A	60	10,3 (Eccentric)	25	46,5	33	16 500	Timing	25
BB1D 630673 B/VK108	61	10,3 (Eccentric)	33	57,2	40,7	14 600	Timing	25
BB1D 630676 D	61	10,3 (Eccentric)	30	51,2	36,2	14 600	Timing	25
BC-337185 A	55,8	10,3	32	37,8	19,3	14 000	Timing	25

Idlers

SKF Reference	Pulley diameter	Bore diameter	Pulley width	Total width	Center line	C (Dynamic capacity)	Application	Page number
–	mm					N	–	
337093 B	80	10,2	24,8	25	14	9 230	Accessory	26
337116 AD	60	10,2	28,5	39,25	25	13 300	Timing	26
337124 B	60	0	34	45	28	10 530	Timing	26
337153 A	53	10,3	29	31,2	16,7	11 200	Timing	26
337155 C	80	10,3	28,5	28,5	16,7	11 200	Accessory	26
337159 A	100	10,3	29	31,5	17	13 000	Accesory	26
337178 B	65	12,1	36	37	18	24 200	Accessory	26
337185 AD	55,8	10,1	32	32	7,5	14 000	Timing	26
36018 AA	80	8,2	25	31,5	17,25	9930	Accessory	
367018 C	80	8,2	25	31,5	17,25	6 050	Accessory	26
445788 BA	60	9 (Tightening)	34	43,8	26,8	9 950	Timing	27
ARB-1012 C	36	10,2	23,4	28	15,5	5 590	Accesory	27
ARB-1072	90	10	24,5	36	22	9 950	Accessory	27
ARB-1073	80	10	25	31,22	17,35	9 950	Accessory	27
ARB-1082	90	39	37	37	18,5	49 000	Accessory	27
ARB-1099 AA	53	10,3	29	31,2	16,7	9 560	Timing	–
ARB-1124	60	15,918	34	44,92	27,92	10 530	Timing	27
ARB-1125	84	22 (Tightening)	25	51	16,2	9 750	Accesory	27
ARB-1126 A	84	12	25	50,3	16,2	9 750	Accessory	27
ARB-1163 E	40	8	36,4	51,2	34,7	14 800	Timing	27
ARB-1168 B/VK108	60	10	30	30	15	14 800	Timing	28
ARB-1176 A	60	10	30	40,2	25,2	14 800	Timing	28
ARB-1195	65	12	36	54,1	36	24 200	Timing	28
ARB-1196	65	12	36	37,1	19	24 200	Timing	28
ARB-1201 A	60	10	30	37	22	14 800	Timing	28
ARB-1220/VK9052	75,6	8	30	32	13,5	14 800	Timing	28
ARB-1224	60	10	30	40,2	25,2	14 800	Timing	28
ARB-1257 A	65	12	30,8	35,54	20,14	24 200	Timing	28
ARB-1258 A	80	10	29,1	47,25	32,7	24 200	Timing	28
ARB-1266/VK9052	80	10	34	34	16,9	19 900	Timing	29

Index tables

Idlers

SKF Reference	Pulley diameter	Bore diameter	Pulley width	Total width	Center line	C (Dynamic capacity)	Application	Page number
–	mm					N	–	
ARB 1267/VK9052	80	10,15	29	29	14,4	19 900	Timing	29
ARB-1268/VK9052	80	12	34	34	16,9	19 900	Timing	29
ARB-1298/VK108	60	10	31	32,5	17	11 100	Timing	29
ARB-1302 A/VK108	65	33	30,8	41,8	26,4	18 600	Timing	29
ARB-1303	67	25	34,1	34,1	10,55	19 900	Timing	29
ARB-1304	63,75	25	34,1	34,1	10,55	19 900	Timing	29
ARB-1322	70	10	34	34	11,5	18 600	Timing	29
ARB-1328	65	8,85 (Tightening)	30,8	41,9	26,7	18 600	Timing	29
BB2-2037/VK108	28,25	8,3	34	34	7,875	7 800	Timing	30
BB2-2038/VK108	28,25	8,3	29	29	7,875	7 800	Timing	30
BB2-2045/VK108	28,25	8	29	47,3	32,8	7 800	Timing	30
BBL-0002	65	12,1	34	36	19	24 200	Timing	30
BF-337001	64	12	19,08	19,8	9,9	–	Timing	30
BF-337002	84	12	18	18	9	–	Timing	30
BF-337003	84	12	25	25	12,5	9 750	Timing	30

Bearings

SKF Reference	External diameter	Inner diameter	Outer ring width	Total width	C (Dynamic capacity)	Weight	Page number
–	mm					kg	–
617546 A/HT22	52	25	20,6	20,6	18 000	0,19	31
633186 A	52	25	20,6	20,6	23 400	0,185	31
BA2-0003 A	68	10,5	34,5	37	16 500	0,71	31
BA2-0020	53	10,3	19,5	26,75	13 000	0,27	31
BA2-0025	60	25	34	34	16 300	0,33	31
BA2B 633272	60	25	29	29	18 000	0,36	31
BA2B 633280	56	25	29	29	18 000	0,281	31
BA2B 633332 B	67	25	34	34	23 400	0,515	31
BA2B-633340 B	63,75	25	34	35	23 400	0,422	31
BA2D 636072	68	10,5	34,5	37	16 500	0,66	32

Bearings

SKF Reference	External diameter	Inner diameter	Outer ring width	Total width	C (Dynamic capacity)	Weight	Page number
–	mm					kg	–
BB1B 445545 D	50	22	30,8	30,8	14 000	0,173	32
BB1B 445547 E	50	10,25 (Eccentric)	30,8	36,8	14 000	0,29	32
BB1B 631122 B	80	20	23	23	15 900	0,4	32
BB1B 631497 A	80	20	17	17	15 900	0,35	32
BB1B-446508 AC/VZ370	59	30	22	22	13 300	0,201	32
BB1D 630643 B	61	10,5 (Tightening)	30	51,2	14 600	0,37	32
BB1D 630685 A/VK108	51	10,5	33	57,2	14 600	0,4	32
BB1D 631153	60	8,2	21	22	15 900	0,31	32
BB1D 631471	60	8,2	25	26	15 900	0,31903	33
BB2-2002	30	10,05	24,925	27,935	–	0,0605	33
BB2-2010	40	10	25,6	25,6	14 800	0,1575	33
BB2-2015	40	10	25,6	40,2	14 800	0,1885	33
BB2-2016	40	10	25,6	37	14 800	0,1815	33
BB2-2017	40	17	25,6	25,6	14 800	0,125	33
BB2-2017 A	40	17	25,6	25,6	14 800	0,125	33
BB2-2019	40	8	25,6	25,6	14 800	0,1618	33
BB2-2020	40	10	25,6	40,75	14 800	0,189	33
BB2-2022 A	30	10,05	24,925	27,935	9 950	0,074	34
BB2-2044/VK108	28,5	8,3	29	31,6	7 800	0,0767	34
BB2-2046/VK108	50	28	22	22	19 000	0,1491	34
BB2-2050	47	30	24	24	11 100	0,1242	34
BB2-2051/VK108	62	40	21	21	18 600	0,199	34
BB2-2052	65	40	30,8	30,8	18 600	0,307	34
BB2-2055	47	10	54	29	11 100	0,195	34
BB2-2069	28	8	17	17	7 800	0,0497	34
BB2-2070	35	15	20	20	11 900	0,0833	34
BBW-1006 D	30	8,05	24,925	28	10 100	0,0715	35
BC-337152	47	10,3	15	25,3	11 200	0,2	35
BC-362527 AD	28	9,05	27	44,97	4 800	0,118	35
BC-367028 AB	36	8,2	28,5	31,5	6 050	0,116	35
BC-367128 A	30	15,918	25	41,73	6 500	0,116	35
BC-367153 B	36	10,2	25	25	9 230	0,1	35

Index tables

Bearings

SKF Reference	External diameter	Inner diameter	Outer ring width	Total width	C (Dynamic capacity)	Weight	Page number
–	mm					kg	–
BC-ARB-1148	50	24	30,8	36,9	–	0,25	35
BC-ARB-1258	65	10,1	26	45,7	24 200	0,5112	35
BC-ARB-1266	55	10,15	21,1	27,45	19 900	0,26	36
BC-ARB-1268	55	12,15	21,1	27,45	19 900	0,254	36
BC-ARB-1303	55	25	21,1	21,1	19 900	0,227	36
BC-BBW 0134	30	15,918	25	42,93	13 000	0,1213	36

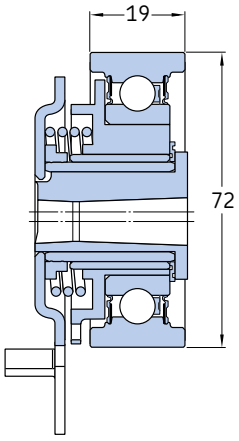

307970 C

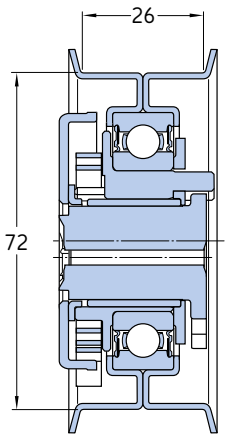

337083 BA

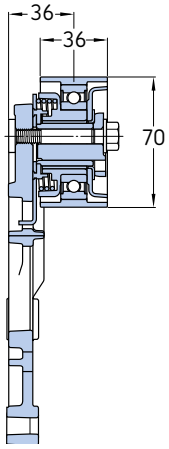

ARB-1022 B

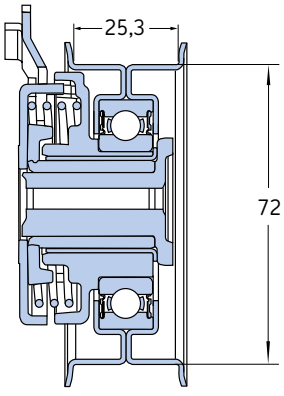

ARB-1111 BB

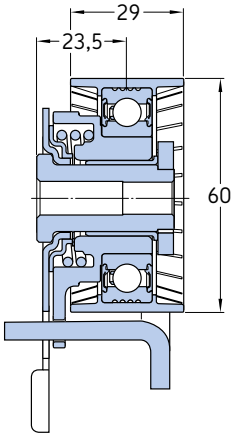

ARB-1169 C/VK108

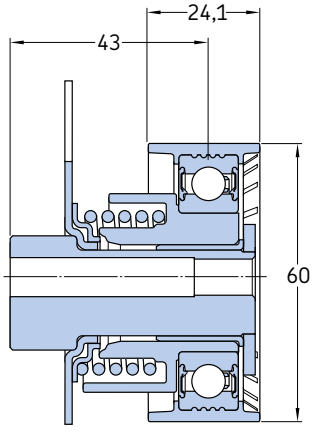

ARB-1246

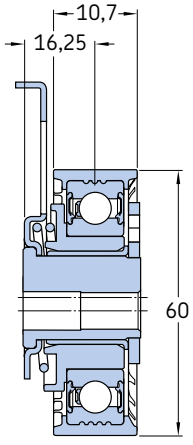

ARB-1247

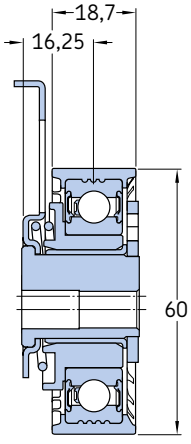

ARB-1281

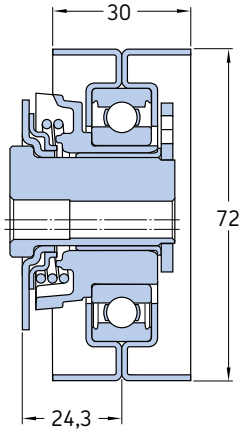

ARB-1314

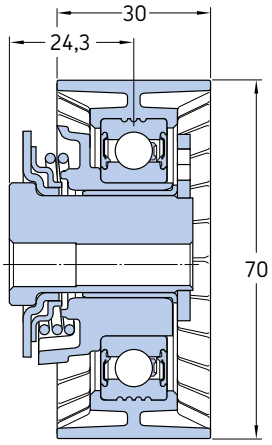

ARB-1315

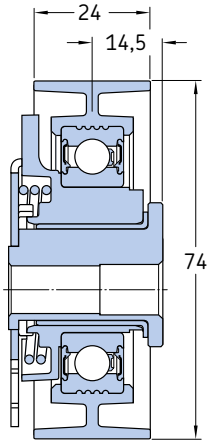

ARB-1316

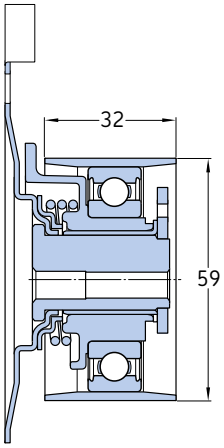

ARB-1317

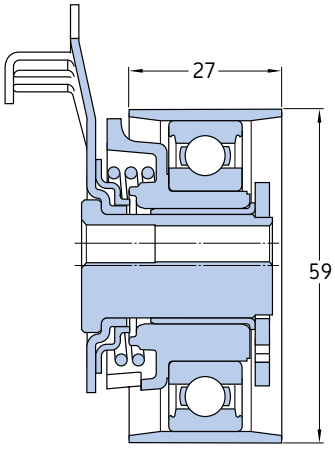

ARB-1318

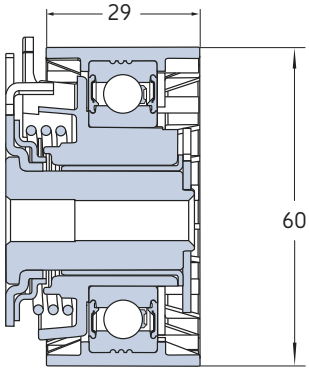

ARB-1319

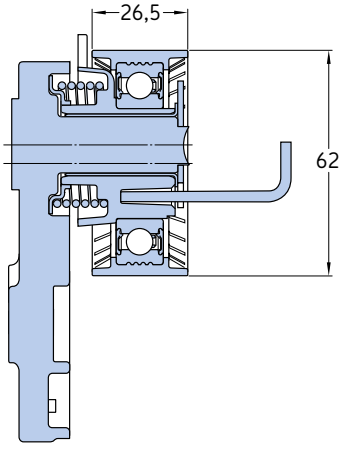

ARB-1320

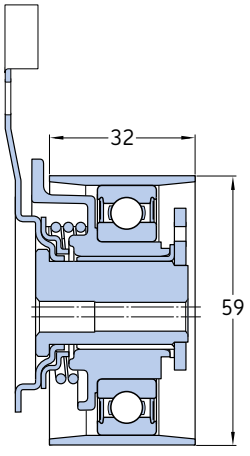

ARB-1321

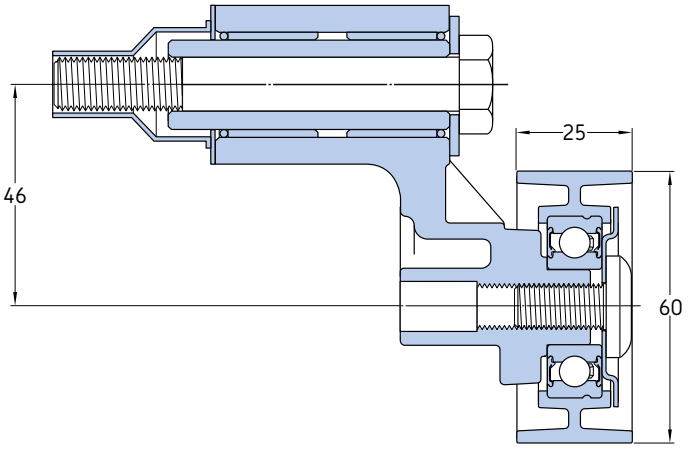

ARB-1325

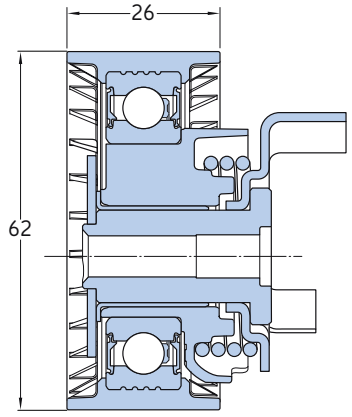

ARB-1338

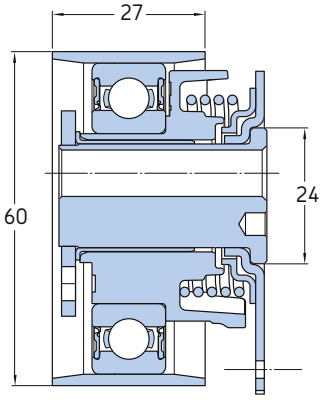

ARB-1339

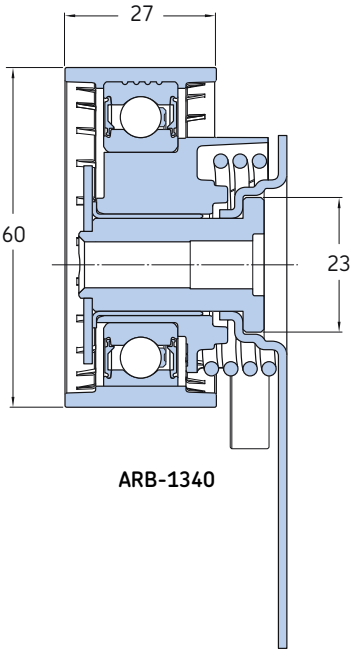

ARB-1340

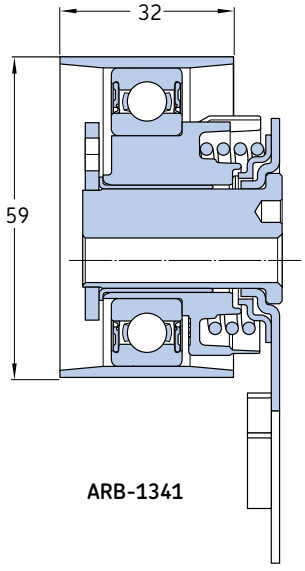

ARB-1341

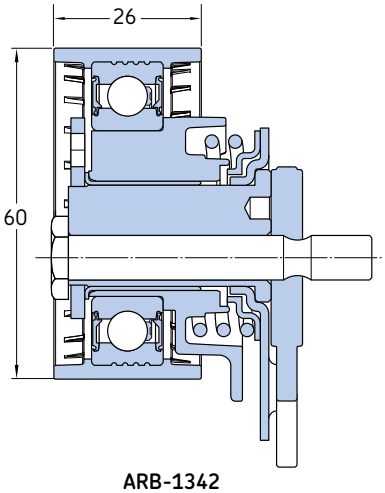

ARB-1342

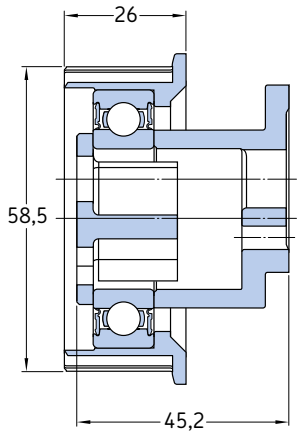

307972

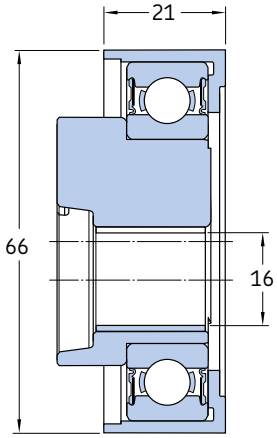

337174

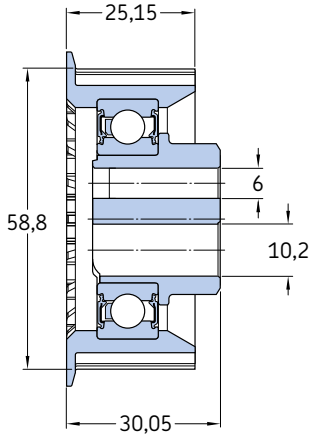

337084

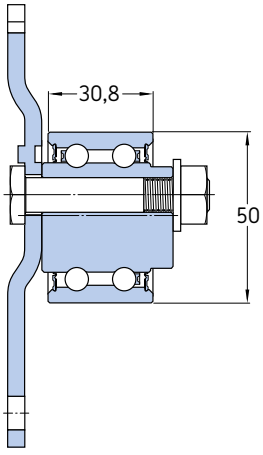

337179

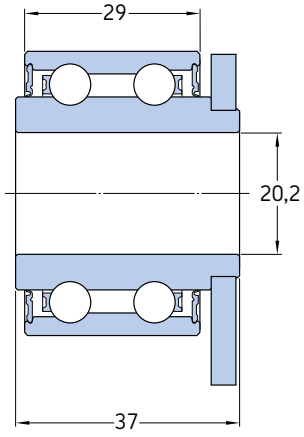

337180

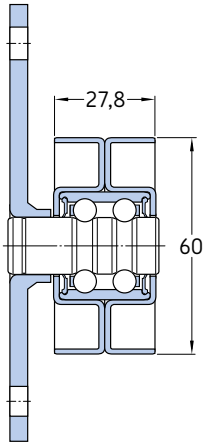

337188

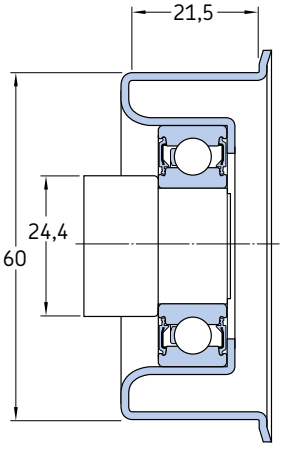

337190

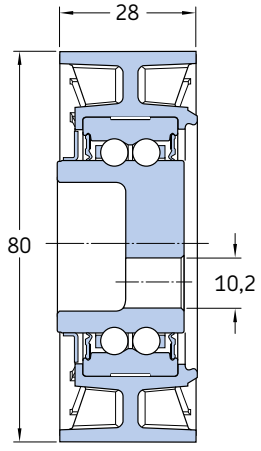

337191

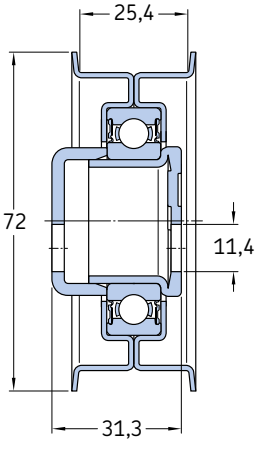

307839 EB

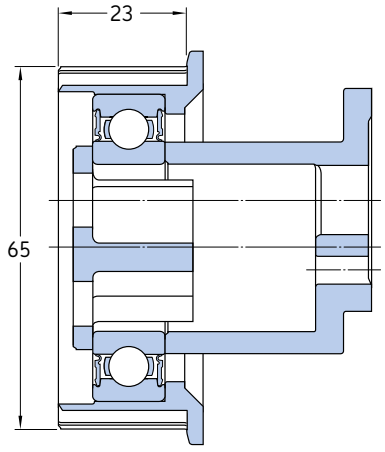

307858 DB

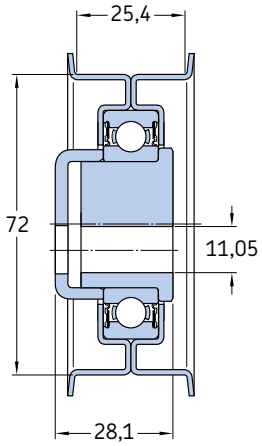

307863 B

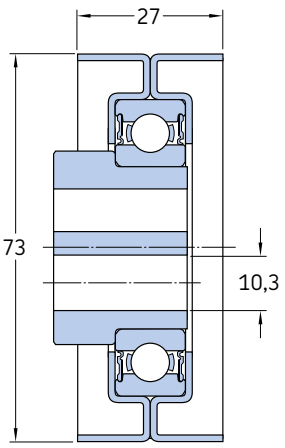

307924 DB

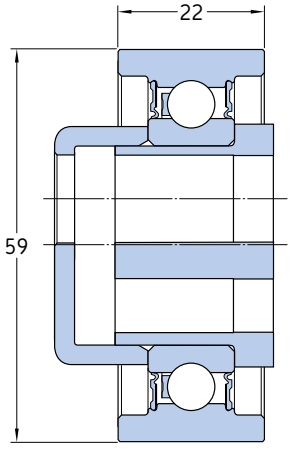

307925 AD

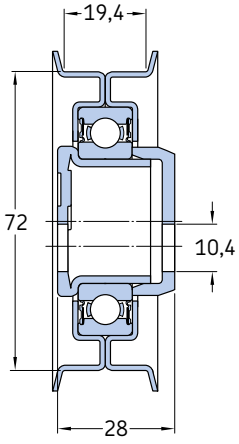

337042 AA

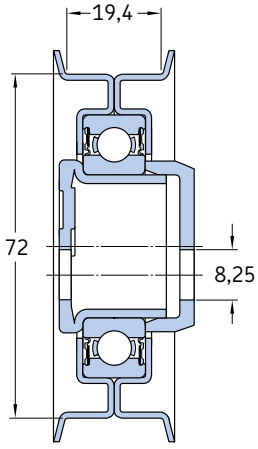

337043 AA

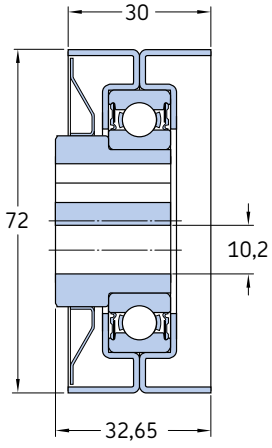

337103 A

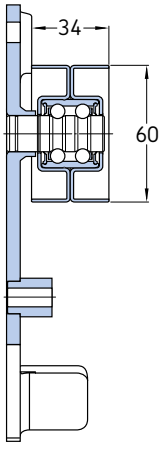

337123 C

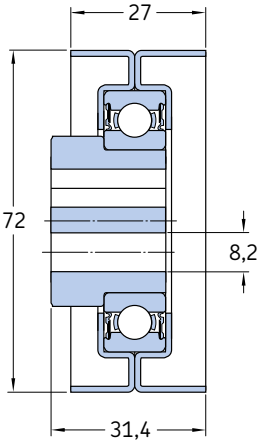

337131 A

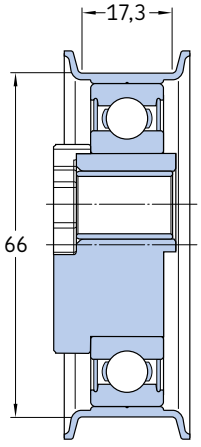

337141 AC

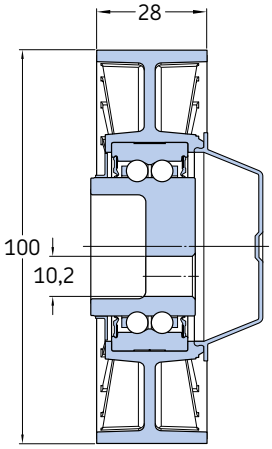

337154 B

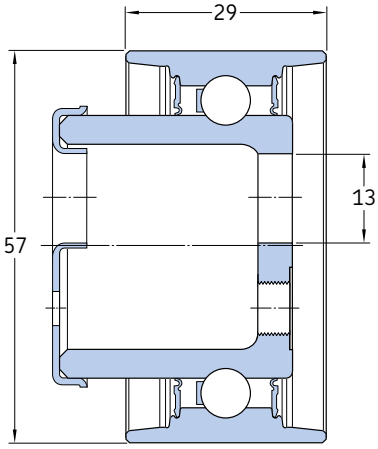

337176 E

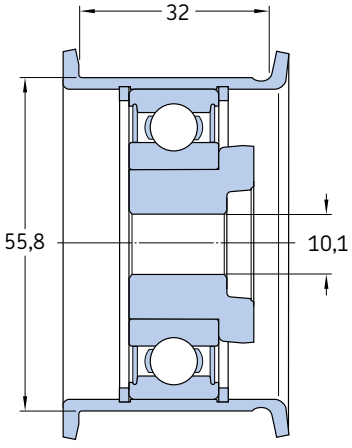

337185 A

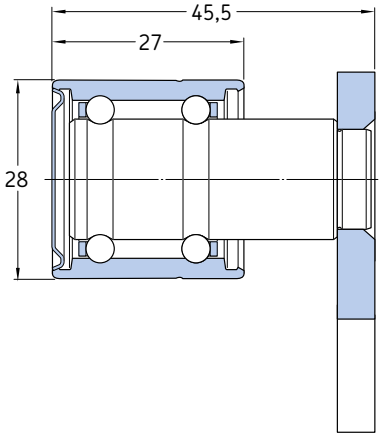

362527 AD

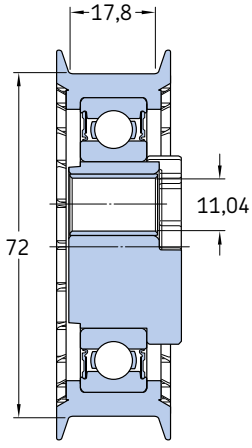

363477 BA

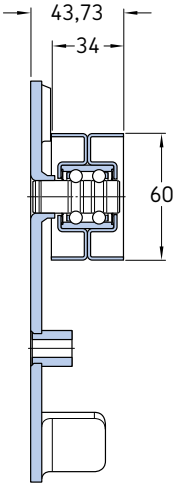

445787 BA

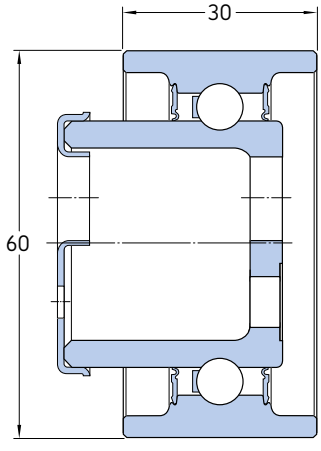

ARB-1006 B

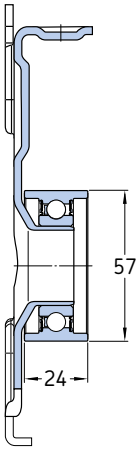

ARB-1097

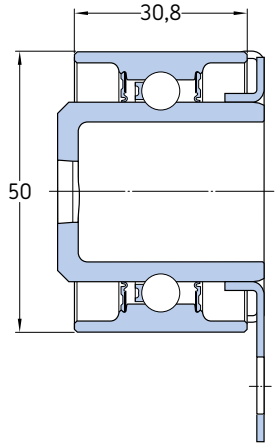

ARB-1148

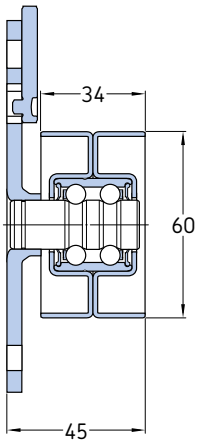

ARB-1238/VK9052

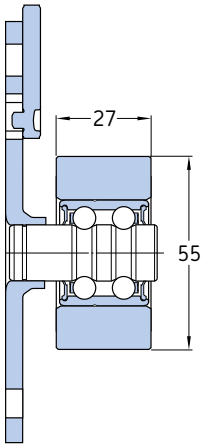

ARB-1252/VK9052

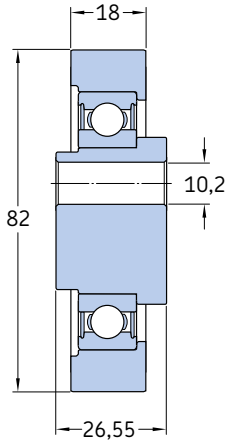

ARB-1259

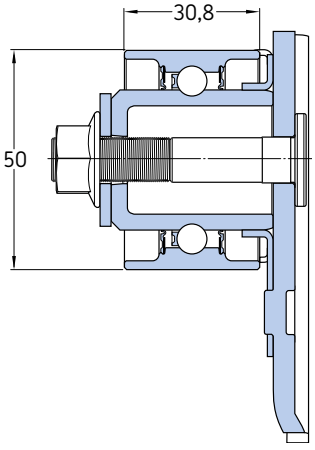

ARB-1326

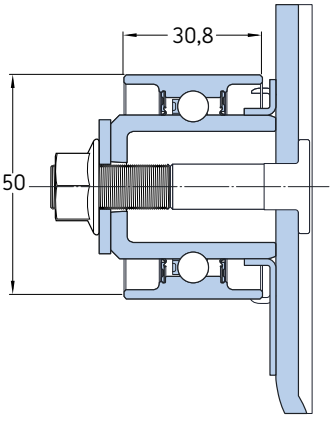

ARB-1327

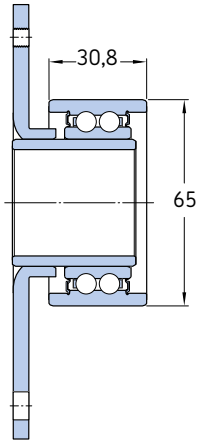

ARB-1328

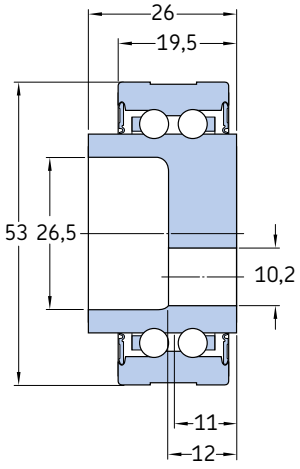

BA2-0017 B

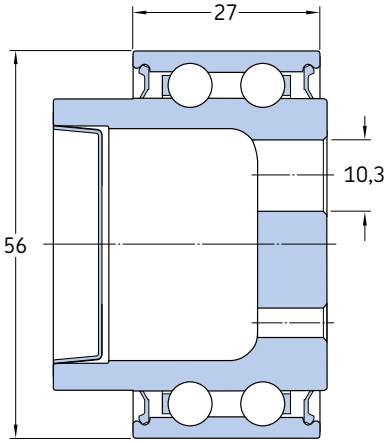

BA2D 633624 BC

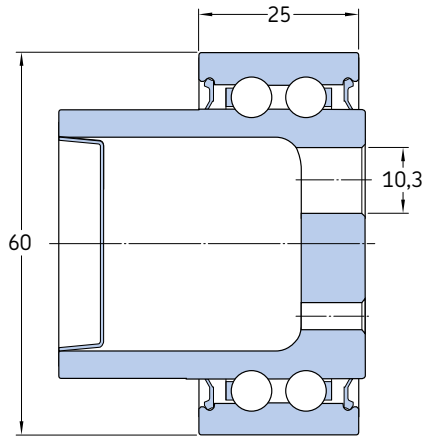

BA2D 633625

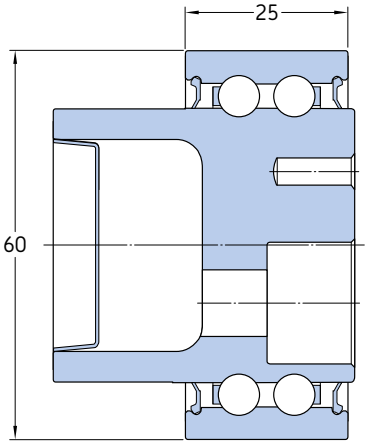

BA2D 633636 A

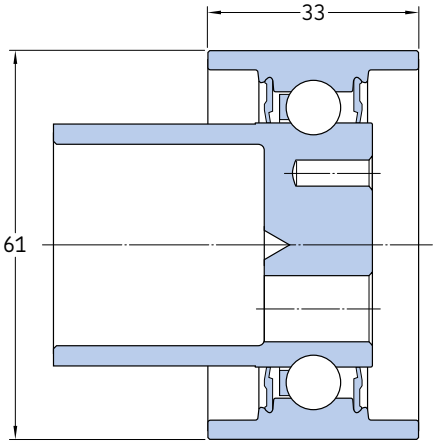

BB1D 630673 B/VK108

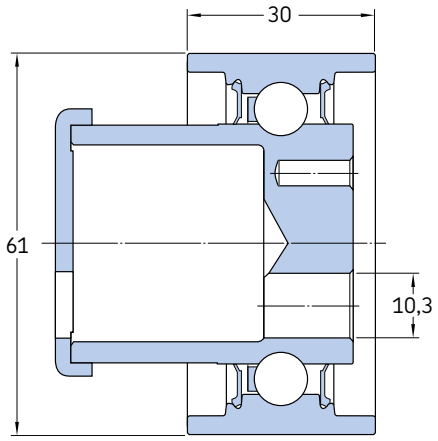

BB1D 630676 D

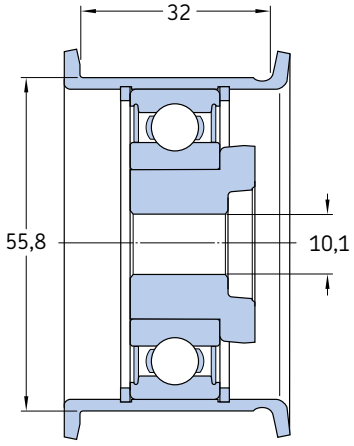

BC-337185 A

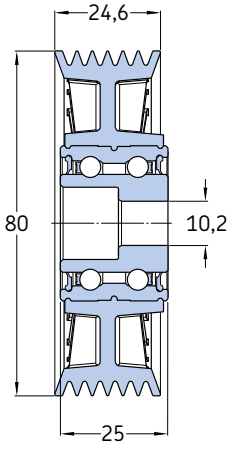

337093 B

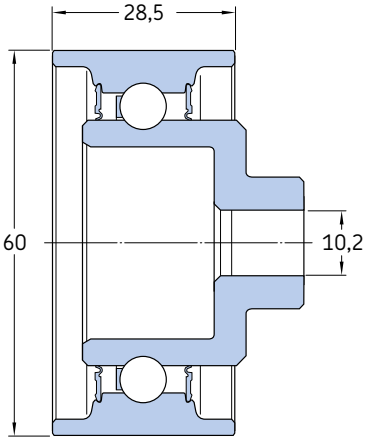

337116 AD

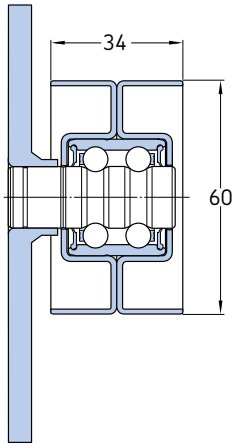

337124 B

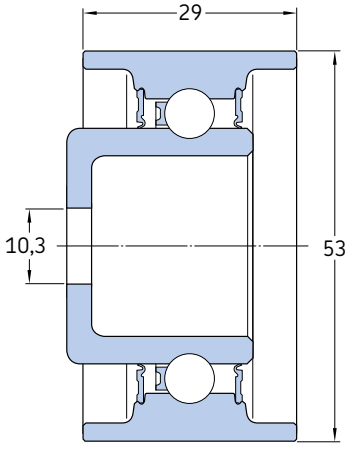

337153 A

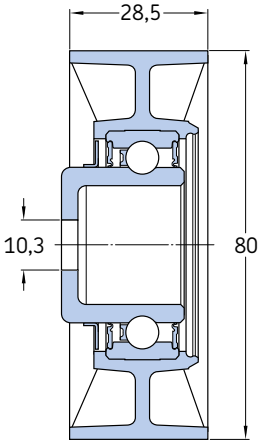

337155 C

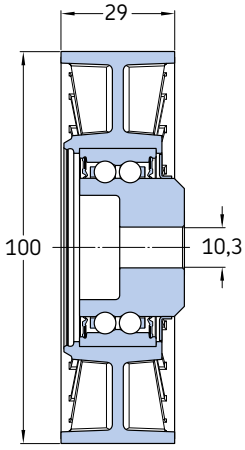

337159 A

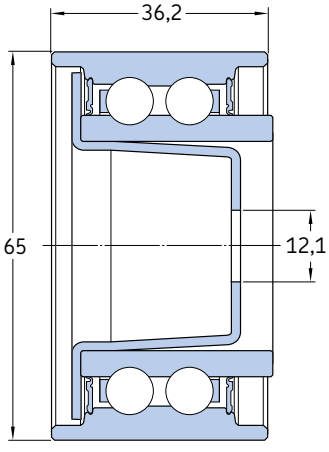

337178 B

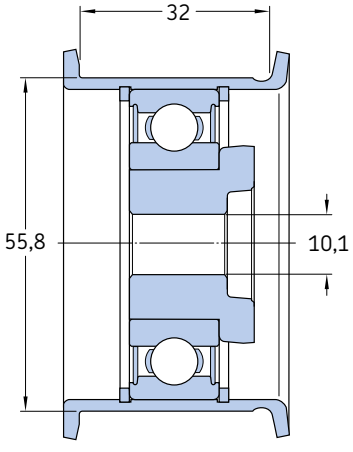

337185 AD

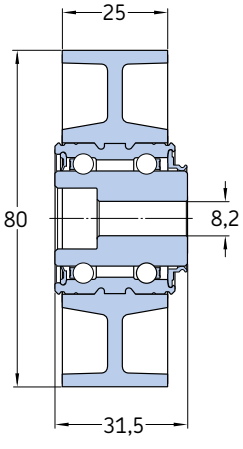

367018 C

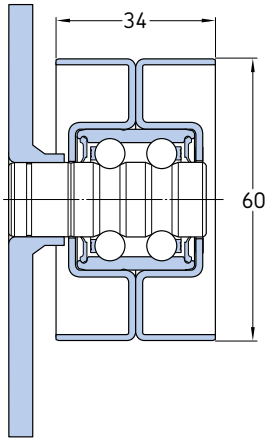

445788 BA

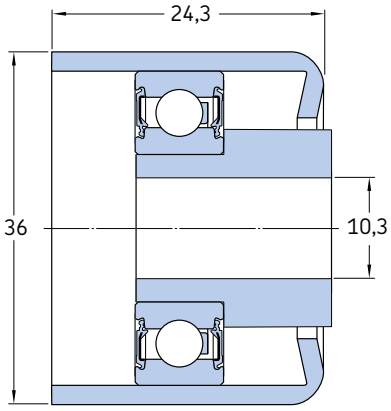

ARB-1012 C

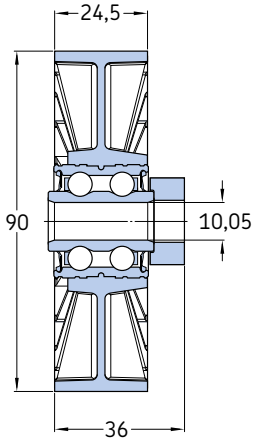

ARB-1072

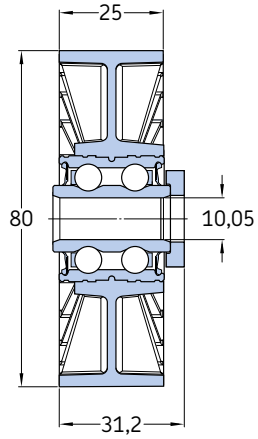

ARB-1073

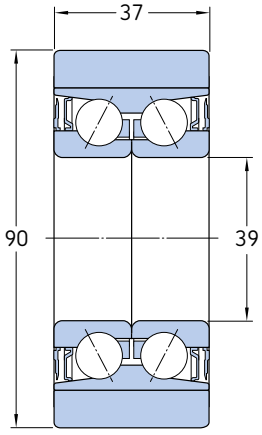

ARB-1082

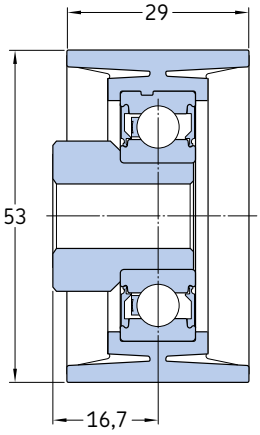

ARB-1099-AA

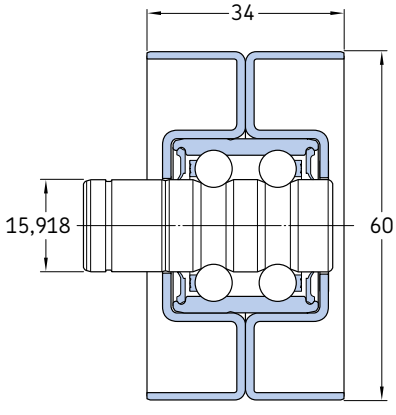

ARB-1124

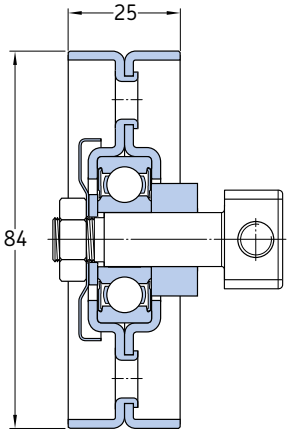

ARB-1125

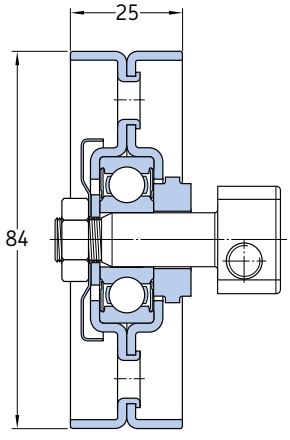

ARB-1126 A

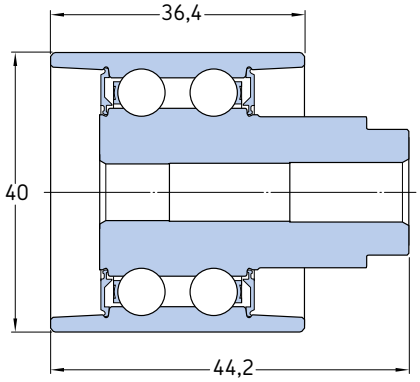

ARB-1163 E

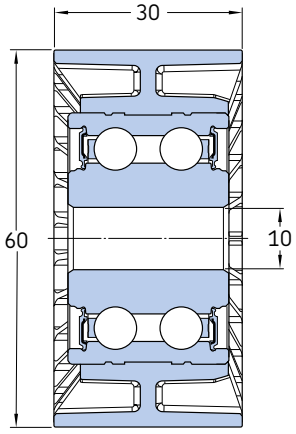

ARB-1168 B/VK108

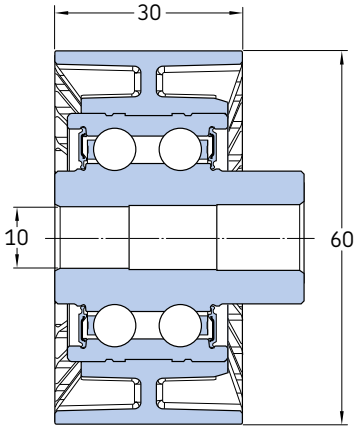

ARB-1176 A

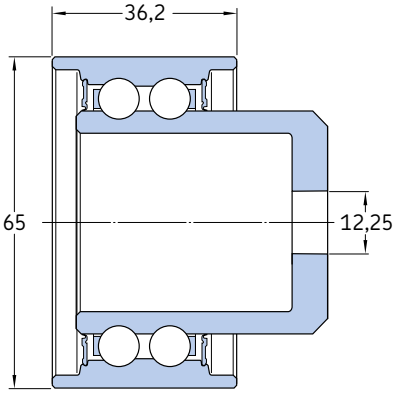

ARB-1195

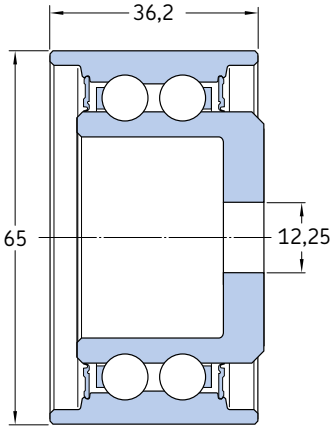

ARB-1196

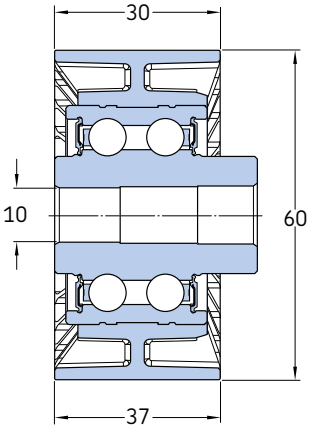

ARB-1201 A

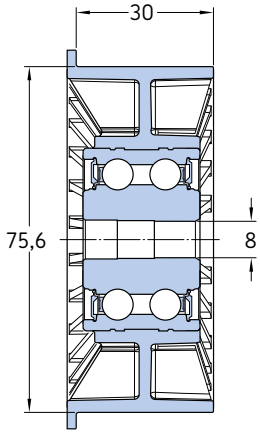

ARB-1220/VK9052

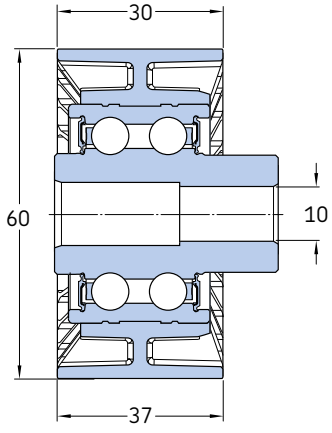

ARB-1224

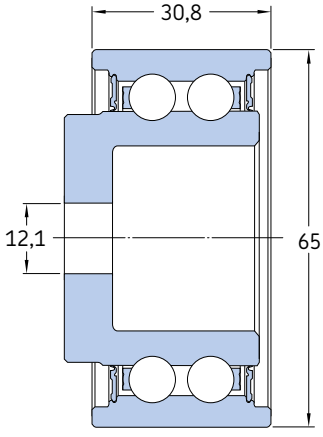

ARB-1257 A

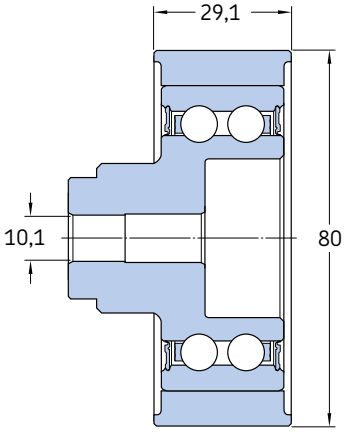

ARB-1258 A

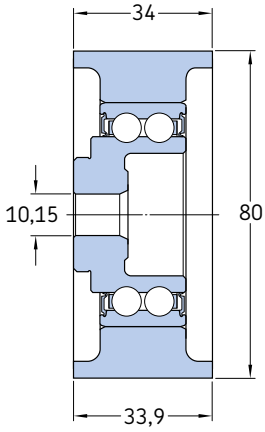

ARB-1266/VK9052

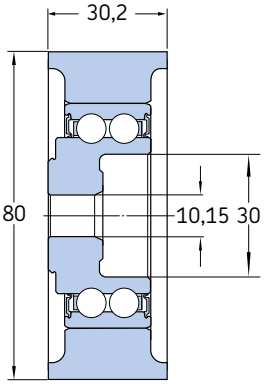

ARB-1267/VK9052

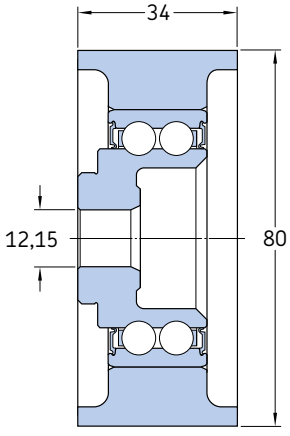

ARB-1268/VK9052

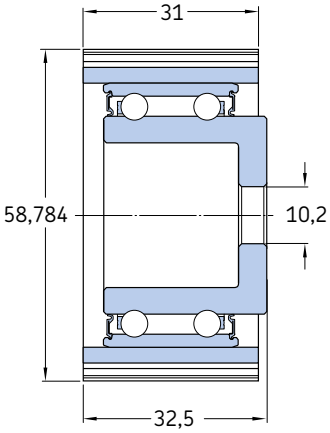

ARB-1298/VK108

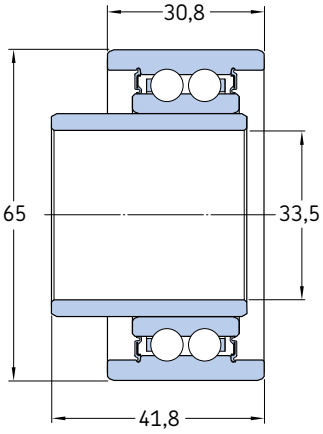

ARB-1302 A/VK108

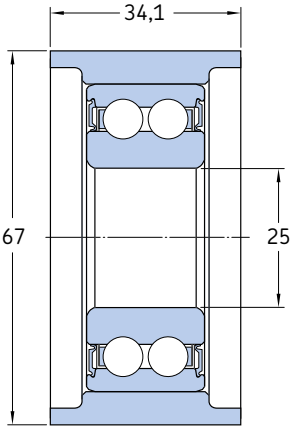

ARB-1303

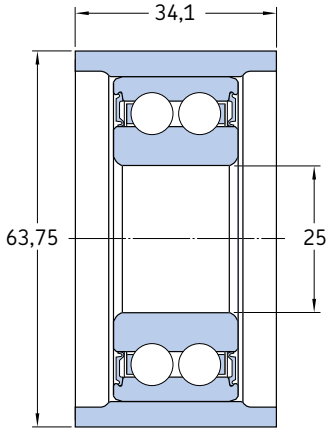

ARB-1304

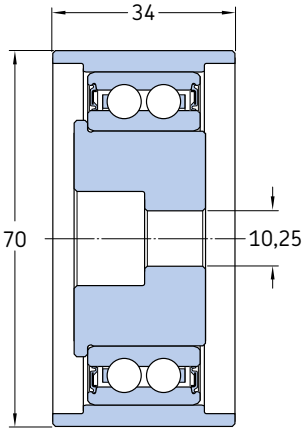

ARB-1322

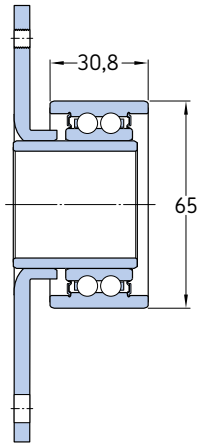

ARB-1328

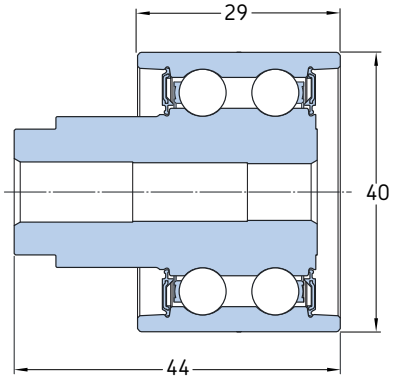

ARB-1330

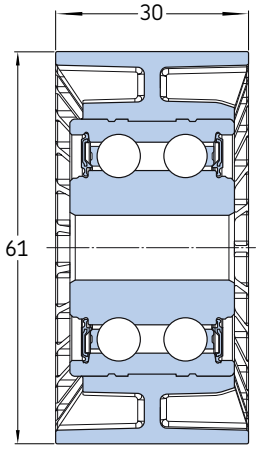

ARB-1332/VK9052

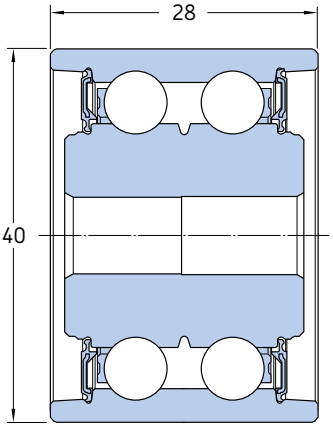

ARB-1336

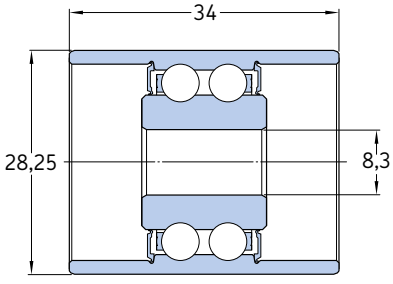

BB2-2037/VK108

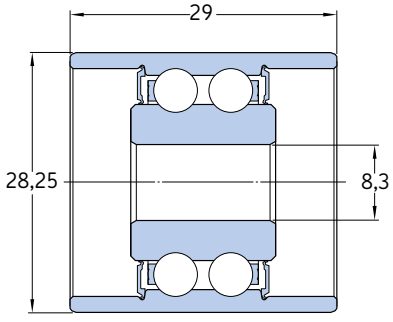

BB2-2038/VK108

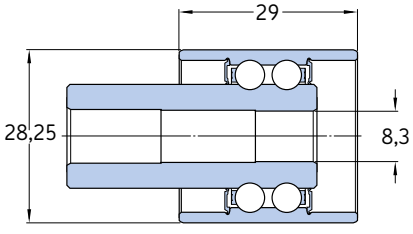

BB2-2045/VK108

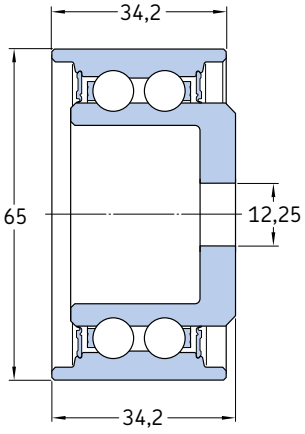

BBL-0002

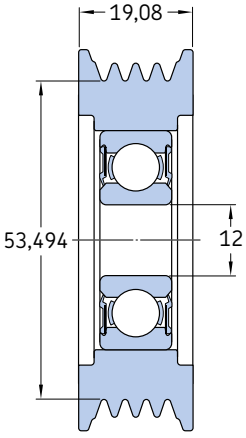

BF-337001

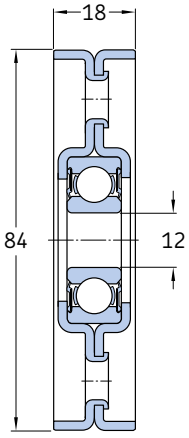

BF-337002

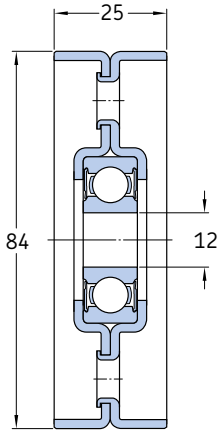

BF-337003

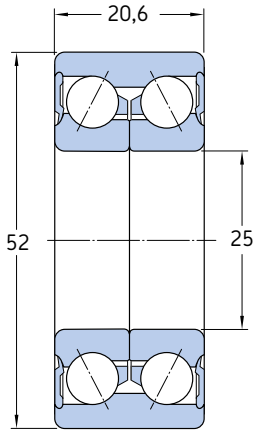

617546 A/HT22

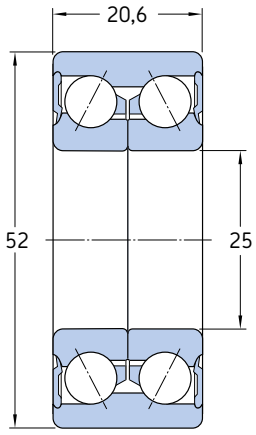

633186 A

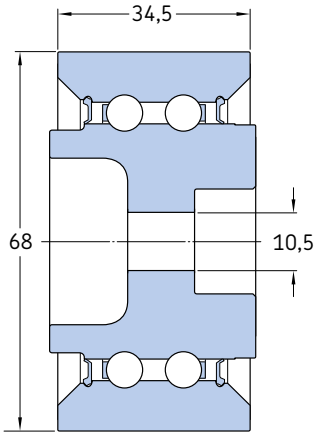

BA2-0003 A

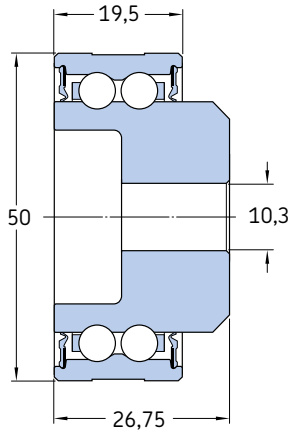

BA2-0020

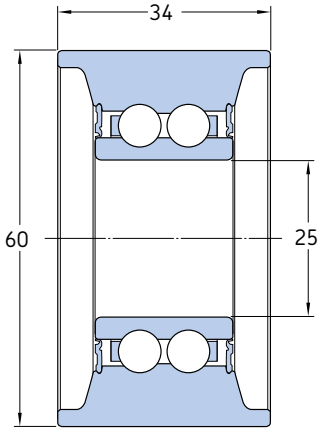

BA2-0025

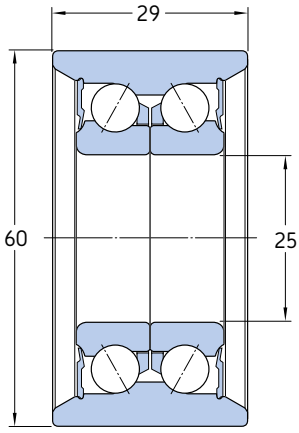

BA2B 633272

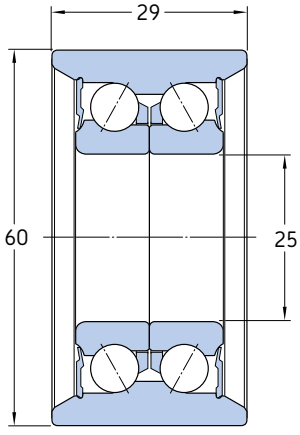

BA2B 633280

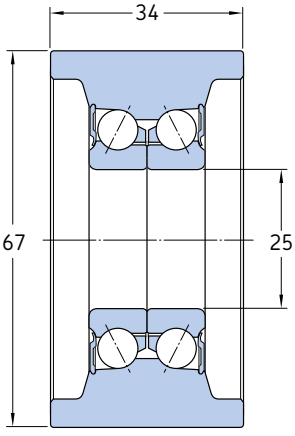

BA2B 633332 B

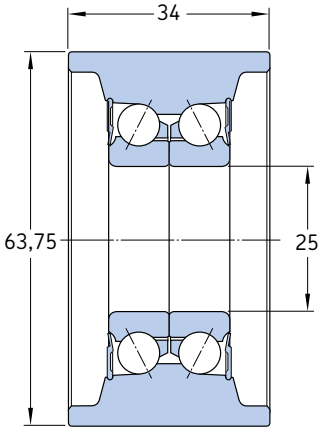

BA2B-633340 B

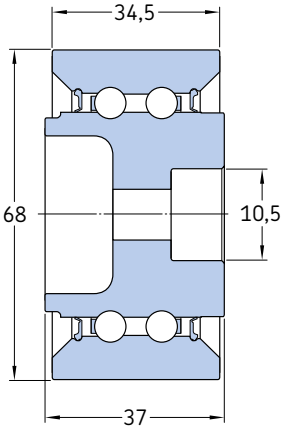

BA2D 636072

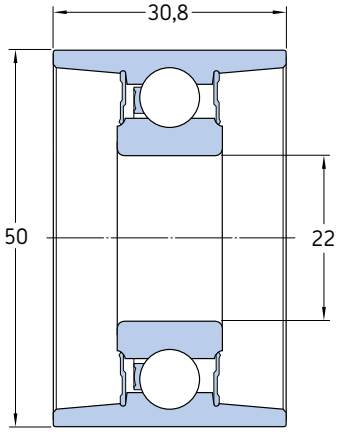

BB1B 445545 D

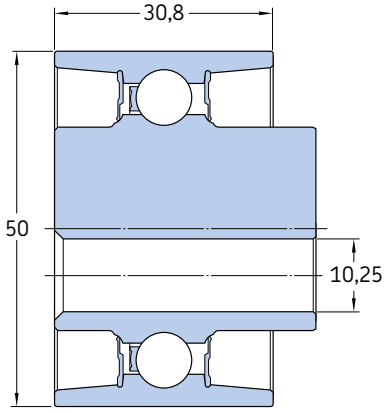

BB1B 445547 E

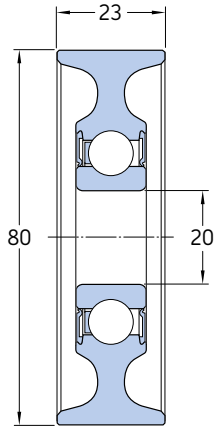

BB1B 631122 B

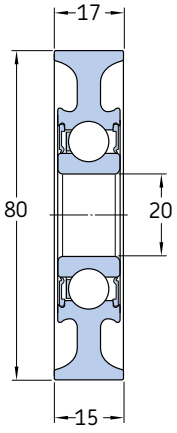

BB1B 631497 A

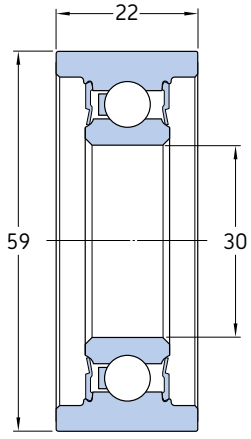

BB1B-446508 AC/VZ370

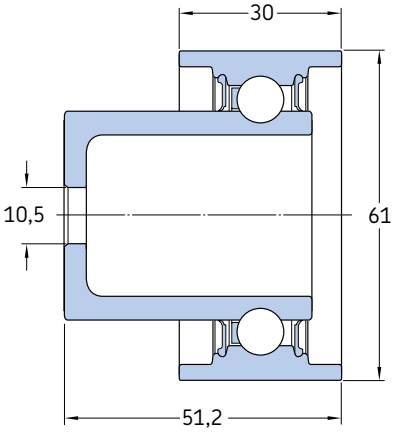

BB1D 630643 B

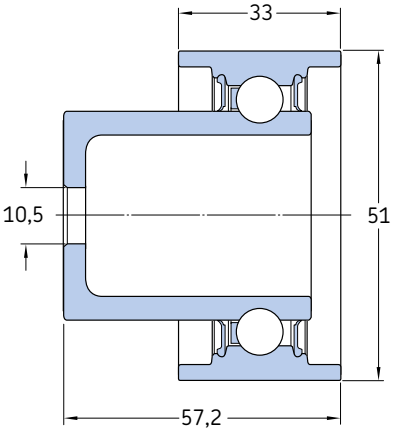

BB1D 630685 A/VK108

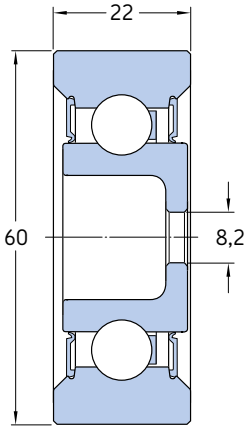

BB1D 631153

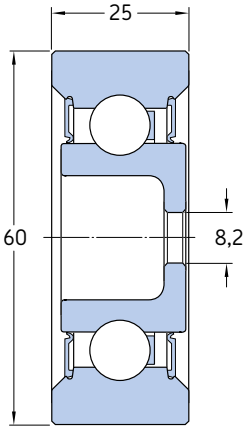

BB1D 631471

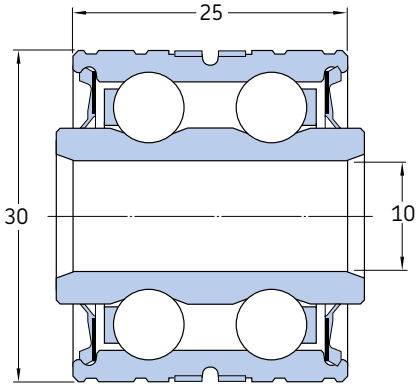

BB2-2002

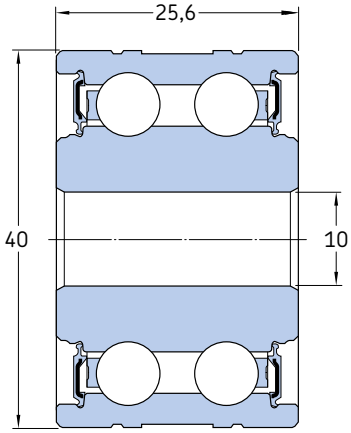

BB2-2010

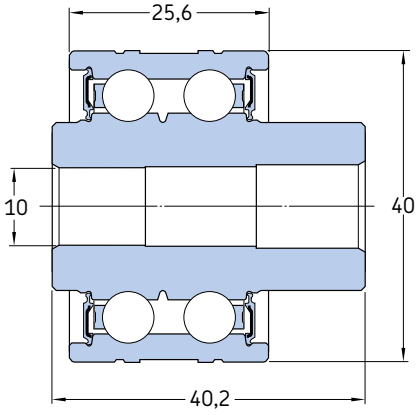

BB2-2015

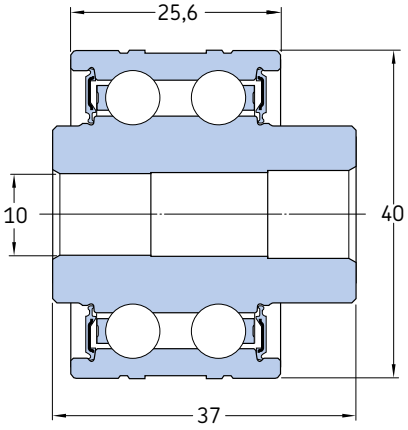

BB2-2016

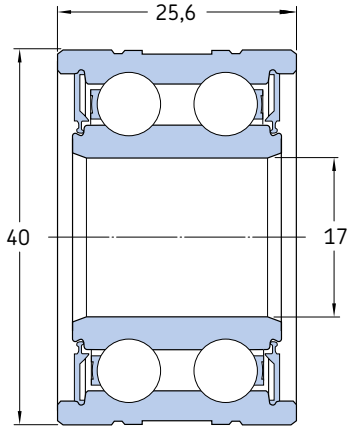

BB2-2017

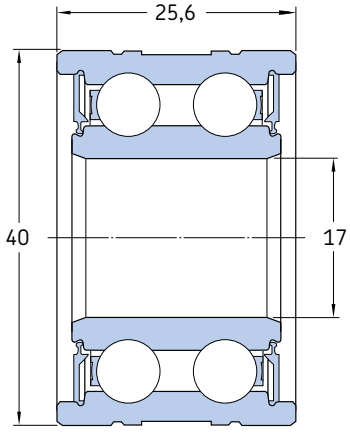

BB2-2017 A

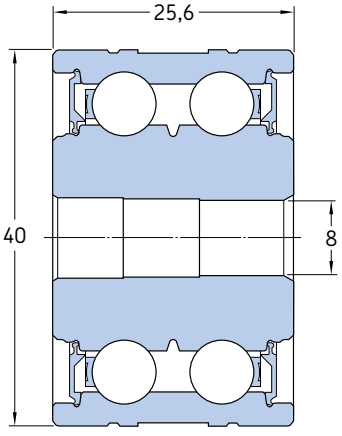

BB2-2019

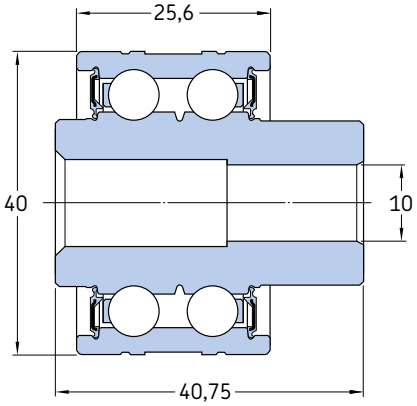

BB2-2020

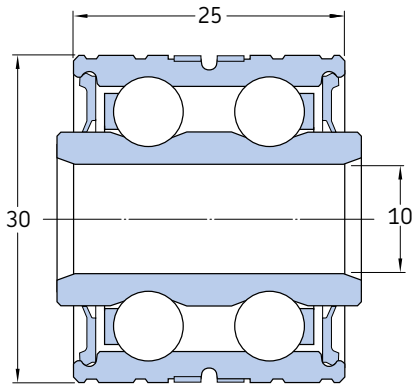

BB2-2022 A

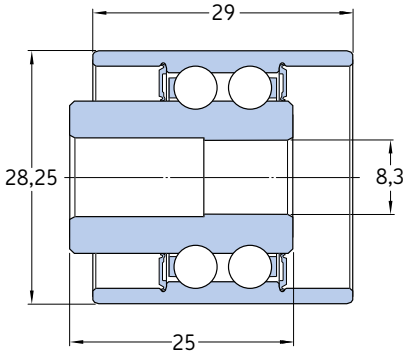

BB2-2044/VK108

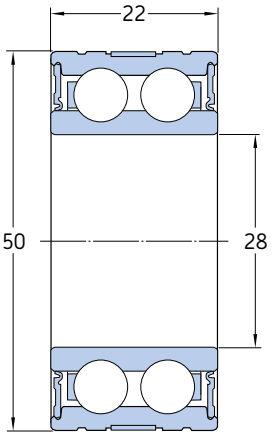

BB2-2046/VK108

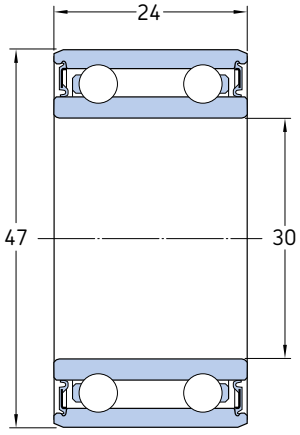

BB2-2050

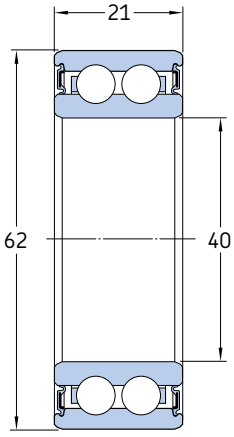

BB2-2051/VK108

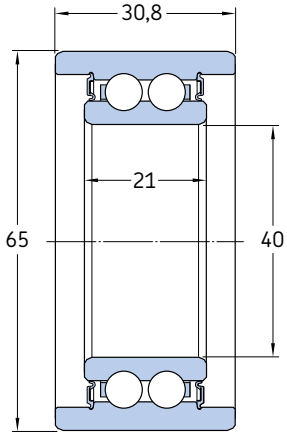

BB2-2052

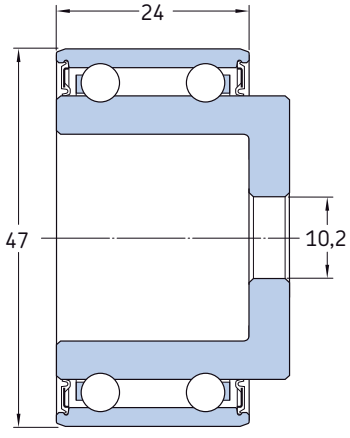

BB2-2055

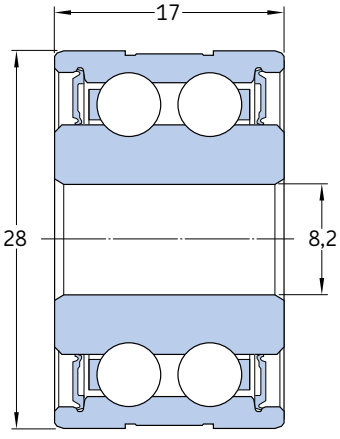

BB2-2069

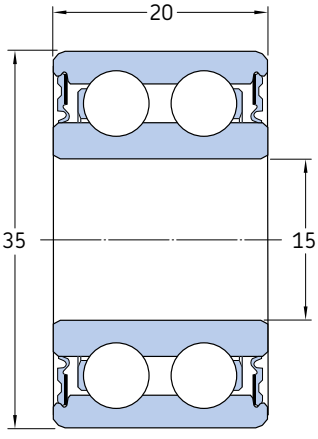

BB2-2070

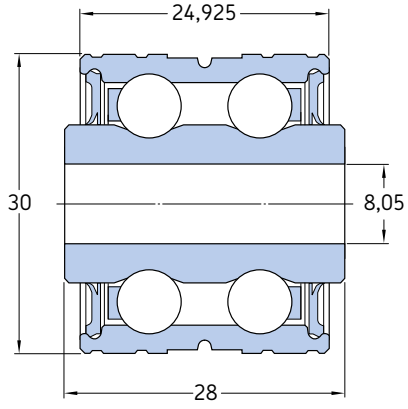

BBW-1006 D

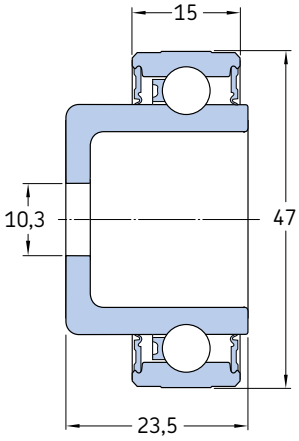

BC-337152

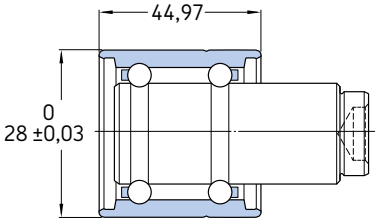

BC-362527 AD

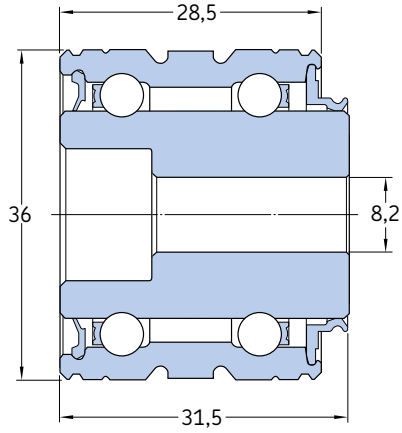

BC-367028 AB

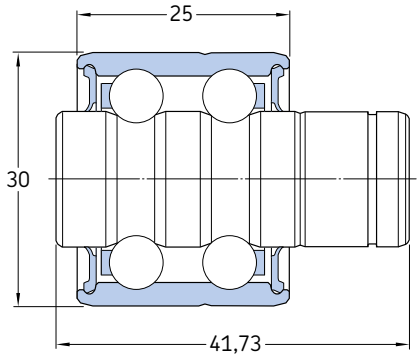

BC-367128 A

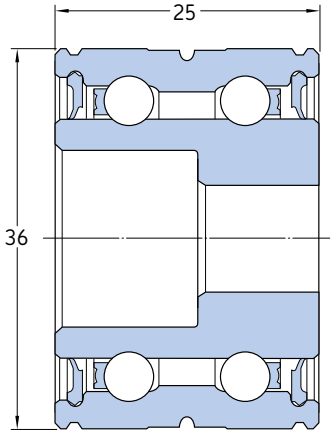

BC-367153 B

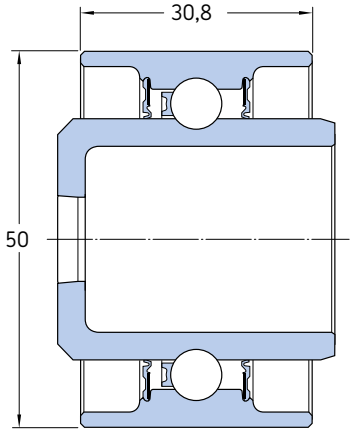

BC-ARB-1148

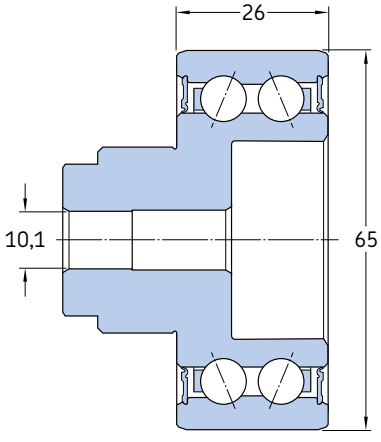

BC-ARB-1258

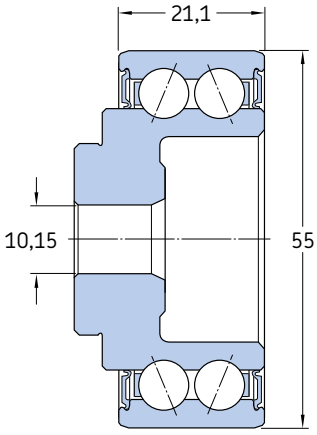

BC-ARB-1266

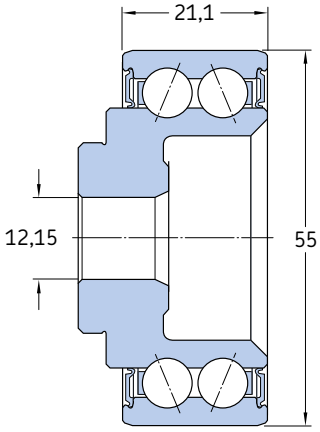

BC-ARB-1268

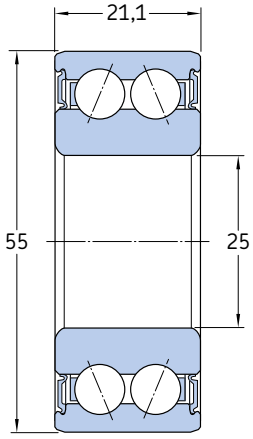

BC-ARB-1303

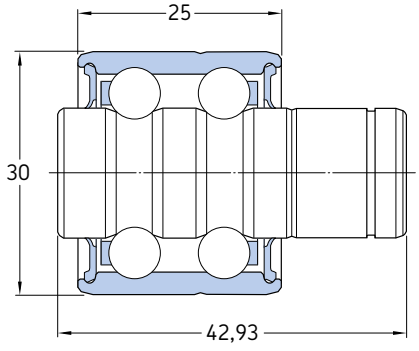

BC-BBW 0134

Automatic belt tensioner units

SKF Reference	Customer's engine references			
	Customer	Fuel	Engine ref	Engine size
307970 C	**GM**	Gasoline	1.2, 1.2 i 1.4, 1.4 i, 1.4 S, 1.4 Si 1.5, 1.5 16v 1.6, 1.6 i, 1.6 GSI 1.6 Si	1.2 l 1.4 l 1.5 l 1.6 l
337083 BA	**AUDI**	Gasoline	2.0 16v, 2.0 E 16v, 2.0 16v Quattro, 2.0 E 16v Quattro	2.0 l
	SEAT	Gasoline	1.8i 16v 2.0 i 16v	1.8 l 2.0 l
	VW	Gasoline	2.0 i 16v, 2.0 GTI 16v	2.0 l
ARB-1022 B	**PSA**	Gasoline	ES (V6), ES9A/L7X762	3.0 l
ARB-1111 BB	**VW**	Gasoline	EA-113 (1.6 77ch) EA-113 (2.0 china)	1.6 l 2.0 l
ARB-1169 C/VK108	**PSA**	Diesel	DV4 DV6	1.4 l 1.6 l
	FORD	Diesel	1.4 TDCi 1.6 TDCi	1.4 l 1.6 l
	MAZDA	Diesel	1.4 CD 1.6 DI Turbo	1.4 l 1.6 l
	MINI	Diesel	Cooper D	1.6 l
	VOLVO	Diesel	1.6 D	1.6 l
ARB-1246	**VW**	Gasoline	1.4, 1.4 16v 1.6 16v, 1.6 FSI	1.4 l 1.6 l
ARB-1247	**VW**	Gasoline	1.4, 1.4 16v, 1.4 FSI 1.6 16v, 1.6 FSI	1.4 l 1.6 l
ARB-1281	**VW**	Gasoline	1.4 16v (EA111) 1.6 16v (EA111)	1.4 l 1.6 l
	SEAT	Gasoline	1.4 16v (EA111)	1.4 l
ARB-1314	**PSA**	Gasoline	1.6 16v / TU5JP4 (before: 1806404)	1.6 l
ARB-1315	**PSA**	Gasoline	1.6, 1.6 16v, 1.6 VTS TU5JP4 (after : 1806405)	1.6 l 1.6 l
ARB-1316	**FORD**	Diesel	LD 18 Lynx 1.8 DI, 1.8 TDCi, 1.8TDDi	1.8 l
ARB-1317	**VOLVO**	Diesel	D5244 T (D5)	2.4 l

Automatic belt tensioner units

SKF Reference	Customer's engine references			
	Customer	Fuel	Engine ref	Engine size
ARB-1318	**RENAULT**	Gasoline	2.0 16v	2.0 l
			2.5 16v	2.5 l
	VOLVO	Gasoline	1.6	1.6 l
			1.8	1.8 l
			2.0, 2.0 T, 2.0 T4, 2.0 Turbo AWD	2.0 l
			2.3 T5	2.3 l
			2.4, 2.4 T, 2.4 T5	2.4 l
			2.5, 2.5 T	2.5 l
ARB-1319	**FIAT**	Gasoline	1.6 16v, 1.6	1.6 l
ARB-1320	**FORD**	Gasoline	1.25, 1.25 16v (ZH12 Zetec)	1.25 l
			1.4, 1.4 16v (ZH14 Zetec)	1.4 l
			1.6, 1.6 16v (ZH16 Zetec)	1.6 l
	MAZDA	Gasoline	1.25	1.25 l
			1.4	1.4 l
			1.6	1.6 l
	VOLVO	Gasoline	1.6	1.6 l
ARB-1321	**VOLVO**	Gasoline	2.8 T6 (B6284 T)	2.8 l
			2.9 (B6294 S)	2.9 l
			3.0, 3.0 T6	3.0 l
ARB-1325	**FIAT**	Diesel	1.9 D, 1.9 TD	1.9 l
			2.1 TD 12v	2.1 l
	LANCIA	Diesel	2.1 TD 12v	2.1 l
	PSA	Diesel	1.8 D	1.8 l
			1.9 D, 1.9 SD, 1.9 TDI	1.9 l
			2.1 D 12v, 2.1 TD 12v	2.1 l

Static belt tensioner units

SKF Reference	Customer's engine references			
	Customer	Fuel	Engine ref	Engine size
307972	**BMW**	Gasoline	1.6 i (3 Series E36)	1.6 l
			1.8 i (3 Series E36, 5 Series E34)	1.8 l
337084	**AUDI**	Gasoline	2.3, 2.3 E, 2.3 quattro, 2.3 E quattro	2.3 l
337174	**SEAT**	Gasoline	1.2, 1.2 i	1.2 l
			1.5, 1.5 i, 1.5 i CAT	1.5 l
			1.7	1.7 l
337179	**RENAULT**	Gasoline	1.7, 1.7 i	1.7 l
	VOLVO	Gasoline	1.7, 1.7 Turbo	1.7 l
337180	**VOLVO**	Gasoline	2.0, 2.0 Turbo	2.0 l
			2.1, 2.1 Turbo	2.1 l
			2.3, 2.3 Turbo	2.3 l
337188	**PSA**	Gasoline	2000, 2.0, 2.0 TI, 2.0 STI	2.0 l
			2.2, 2.2 GTI	2.2 l
	RENAULT	Gasoline	2.0, 2.0 i, 2.0 Turbo	2.0 l
			2.2	2.2 l

Static belt tensioner units

SKF Reference	Customer's engine references			
	Customer	Fuel	Engine ref	Engine size
337190	**NISSAN**	Diesel	2.0 TD	2.0 l
337191	**ALFA ROMEO**	Diesel	2.4 JTD, 2.4 JTD 20v	2.4 l
	FIAT	Diesel	2.4 JTD, 2.4 TD	2.4 l
	LANCIA	Diesel	2.4 JTD	2.4 l
307839 EB	**AUDI**	Diesel	1.6 D, 1.6 TD	1.6 l
			1.9 D, 1.9 TD	1.9 l
	SEAT	Diesel	1.9 D, 1.9 SDI	1.9 l
	VW	Diesel	1.5 D	1.5 l
			1.6 D, 1.6 TD, 1.6 TD Syncro	1.6 l
			1.7 D	1.7 l
			1.9 D, 1.9 TD, 1.9 GTD	1.9 l
307858 DB	**BMW**	Gasoline	1.6 i (E30)	1.6 l
			1.8 i (E30, E34)	1.9 l
307863 B	**AUDI**	Gasoline	2.0 16v, 2.0 E 16v, 2.0 16v quattro,	2.0 l
			2.0 E 16v quattro	1.8 l
	SEAT	Gasoline	1.8 16v	1.8 l
	VW	Gasoline	1.8 16v, 1.8 GTI 16v	1.8 l
			2.0 16v, 2.0 GTI 16v	2.0 l
307924 DB	**AUDI**	Gasoline	2.6, 2.6 quattro	2.6 l
			2.8, 2.8 E, 2.8 quattro, 2.8 E quattro	2.8 l
307925 AD	**PSA**	Gasoline	1.1	1.1 l
			1.4	1.4 l
			1.6 (AD)	1.6 l
337042 AA	**PORSCHE**	Gasoline	2.0, 2.0 Turbo	2.0 l
	SEAT	Gasoline	1.6	1.6 l
			1.8	1.8 l
			2.0	2.0 l
	VW	Gasoline	1.3	1.3 l
			1.5	1.5 l
			1.6	1.6 l
			1.7	1.7 l
			1.8	1.8 l
			2.0	2.0 l
	AUDI	Gasoline	1.3	1.3 l
			1.5	1.5 l
			1.6	1.6 l
			1.8	1.8 l
			2.0	2.0 l
337103 A	**RENAULT**	Diesel	2.2 TD	2.2 l
337123 C	**PSA**	Gasoline	XU8	1.8 l
337131 A	**AUDI**	Gasoline	2.6, 2.6 quattro	2.6 l
			2.8, 2.8 quattro	2.8 l

Static belt tensioner units

SKF Reference	Customer's engine references			
	Customer	Fuel	Engine ref	Engine size
337141 AC	**AUDI**	Gasoline	1.6	1.6 l
			2.0, 2.0 E, 2.0 E quattro	2.0 l
	VW	Gasoline	1.6	1.6 l
337154 B	**ALFA**	Diesel	2.4 JTD	2.4 l
	FIAT	Diesel	2.0 TD	2.0 l
	LANCIA	Diesel	2.4 D Multijet, 2.4 T.DS, 2.4 JTD	2.4 l
		Gasoline	2.0 Turbo, 2.0 20v, 2.0 20v Turbo	2.0 l
			2.4, 2.4 20v	2.4 l
337176 E	**PSA**	Gasoline	XU	1.8 l
			XU	2.0 l
337185 A	**OPEL**	Gasoline	2.5 V6	2.5 l
			3.0 V6	3.0 l
362527 AD	**BMW**	Gasoline	2.0 (E30, E12, E28, E34)	2.0 l
			2.5 (E30, E34, Z1)	2.5 l
			2.7 (E28, E30)	2.7 l
363477 BA	**AUDI**	Gasoline	2.0, 2.0 E, 2.0 quattro, 2.0 E quattro	2.0 l
445787 BA	**LADA**	Diesel	1900 Diesel	1.9 l
	PSA	Diesel	1.7 D, 1.7 TD	1.7 l
			1.8 D, 1.8 TD	1.8 l
			1.9 D, 1.9 DT, 1.9 TD	1.9 l
	ROVER	Diesel	218 D, 218 TD, 418 TD, 1.8 TD	1.8 l
	TALBOT	Diesel	1.9 D	1.9 l
ARB-1006 B	**PSA**	Diesel	DW8	1.9 l
			DW10	2.0 l
ARB-1097	**PSA**	Gasoline	1.6, 1.6 Aut., 1.6 i, 1.6 CTI, 1.6 GTI, 1.6 SRI	1.6 l
			1.9, 1.9 CTI, 1.9 GTI	1.9 l
ARB-1148	**OPEL**	Diesel	1.9 D	1.9 l
	RENAULT	Gasoline	1.7	1.7 l
			1.8, 1.8 Rsi	1.8 l
			2.0, 2.0 i	2.0 l
		Diesel	1.6 D	1.6 l
			1.9 D, 1.9 TD, 1.9 dT, 1.9 dTi, 1.9 dCi	1.9 l
	VOLVO	Gasoline	1.6	1.6 l
			1.7, 1.7 Turbo	1.7 l
			1.8	1.8 l
			2.0	2.0 l
		Diesel	1.9 Turbo-Diesel, 1.9 DI, 1.9 TD	1.9 l
ARB-1238/VK9052	**RENAULT**	Diesel	2.1 D, 2.1 TD	2.1 l
ARB-1252/VK9052	**AUDI**	Gasoline	3.7 (V8)	3.7 l
			4.2 (V8)	4.2 l
	VW	Gasoline	4.2 V8	4.2 l
ARB-1259	**FERRARI**	Gasoline	6.0 V12 (F599)	6.0 l

Static belt tensioner units

SKF Reference	Customer's engine references			
	Customer	Fuel	Engine ref	Engine size
ARB-1326	**OPEL**	Diesel	1.9 D	1.9 l
	RENAULT	Gasoline	1.7	1.7 l
			1.8, 1.8 Rsi	1.8 l
			2.0, 2.0 i	2.0 l
		Diesel	1.9 D, 1.9 TD, 1.9 dT, 1.9 dTi, 1.9 dCi	1.9 l
	VOLVO	Gasoline	1.6	1.6 l
			1.7, 1.7 Turbo	1.7 l
			1.8	1.8 l
			2.0	2.0 l
		Diesel	1.6 D	1.6 l
			1.9 DI, 1.9 TD	1.9 l
ARB-1327	**RENAULT**	Diesel	1.9 dCi	1.9 l
	NISSAN	Diesel	dCi 80, dCi 100	1.9 l
	OPEL	Diesel	1.9 DI, 1.9 DTI	1.9 l
	VOLVO	Diesel	1.9 DI	1.9 l
BA2D 633624 BC	**ALFA**	Gasoline	2.0 16v Turbo Q4	2.0 l
	FIAT	Gasoline	1.1	1.1 l
			1.3, 1.3 Turbo i.e.	1.3 l
			1.5	1.5 l
			1.6	1.6 l
			1.8 i.e. 16v Sport	1.8 l
			2000 16v, 2.0 16v, 2.0 i.e. 16v Sport, 2.0 16v Turbo	2.0 l
	LANCIA	Gasoline	1.1	1.1 l
			1.3	1.3 l
			1.5	1.5 l
			2000 16v, 2000 Turbo 16v, 2000 i.e. 16v, 2000 i.e. 16v Turbo, 2.0 16v HF Integrale, 2.0 16v Evo HF Integrale, 2.0 16v Turbo	2.0 l
BA2D 633625	**ALFA**	Gasoline	2.0 Turbo	2.0 l
	FIAT	Gasoline	90 i.e. 1.6, 105 1.6, 100 Super 1.6, 100 i.e. 1.6	1.6 l
			1.8 i.e.	1.8 l
			2000 CHT	2.0 l
	LANCIA	Gasoline	1.6, 1.6 i.e., 1.6 GT i.e., 1.6 HF Turbo	1.6 l
			2000 i.e.	2.0 l
BA2D 633636 A	**FIAT**	Gasoline	1.8 i.e.	1.8 l
			2000 i.e., 2000 i.e. Turbo, 2.0 i.e.	2.0 l
	LANCIA	Gasoline	1.8 i.e	1.8 l
			2000 i.e., 2000 i.e. Turbo, 2000 i.e. Turbo Integrale	2.0 l
			2000 Turbo, 2.0 i.e., 2.0 HF Integrale, 2.0 Turbo	
BB1D 630673 B/VK108	**ALFA**	Diesel	1.9 TD	1.9 l
	PSA	Diesel	1.9 TD	1.9 l
	FIAT	Diesel	1.7 D	1.7 l
		Diesel	1.9 D, 1.9 TD, 1.9 TD CAT	1.9 l
	LANCIA	Diesel	1.9 TD, 1.9 TDS	1.9 l
BB1D 630676 D	**FIAT**	Diesel	70 TD 1.4	1.4 l
			DS 1.7, 1.7 D, 60 1.7 D, 65 1.7 D, 1.7 Diesel, 1.7 TD, 60 TD 1.7	1.7 l
			1.9 D	1.9 l

Idlers engine references

SKF Reference	Customer's engine references			
	Customer	Fuel	Engine ref	Engine size
337093 B	**FIAT**	Gasoline	1.8 HGT 130 2.0 20v, 2.0 150 20v, 2.0 155 20v, 2.0 HGT 20v, 2.0 20v Turbo 2.4 20v	1.8 l 2.0 l 2.4 l
337116 AD	**PSA**	Diesel	TUD3 TUD5 XUD11A	1.4 l 1.5 l 2.1 l
337124 B	**PSA**	Diesel	XUD7 XUD9	1.8 l 1.9 l
337153 A	**FIAT**	Diesel	1.9 JTD 2.4 JTD	1.9 l 2.4 l
337155 C	**FIAT**	Diesel	old 1.9 JTD 2.4 JTD	1.9 l 2.4 l
337159 A	**FIAT**	Gasoline	1.6 1.8 2.0 2.5	1.6 l 1.8 l 2.0 l 2.5 l
337185 AD	**GM (Calibra,Omega, Cadillac, Saab, Epsilon platform)**	Gasoline	V6	3.2 l
367018 AA	**MERCEDES**	Diesel	2.0 D, 200 D 220 D 108 D 2.3, 110 D 2.3, 230 TD 2.5 D, 2.5 Turbo-D, 250 D, 250 GD, 250 Turbo-D 290 Turbo-D 300 Turbo-D, 300D 350 Turbo-D	2.0 l 2.2 l 2.3 l 2.5 l 2.9 l 3.0 l 3.5 l
		Gasoline	1.8 2.0, 200 2.3, 2.3-16v, 230 2.5-16v, 2.5 Evolution II 320	1.8 l 2.0 l 2.3 l 2.5 l 3.2 l
	VW	Diesel	2.8 TDI	2.8 l
367018 C	**MERCEDES**	Gasoline Diesel	230 250 GD 290 TD	2.3 l 2.5 l 2.9 l
445788 BA	**LADA**	Diesel	1900 Diesel	1.9 l
	PSA	Diesel	1.7 D, 1.7 TD 1.8 D, 1.8 TD 1.9 D, 1.9 DT, 1.9 TD	1.7 l 1.8 l 1.9 l
	ROVER	Diesel	218 D, 218 TD, 418 TD, 1.8 TD	1.8 l
	TALBOT	Diesel	1.9 D	1.9 l

Idlers

SKF Reference	Customer's engine references			
	Customer	Fuel	Engine ref	Engine size
ARB-1072	**FIAT**	Diesel Gasoline	2.4 JTD 10v 1.6 1.8 2.0 2.5	2.4 l 1.6 l 1.8 l 2.0 l 2.5 l
ARB-1073	**FIAT**	Diesel	1.9 JTD 8v 2.4 JTD	1.9 l 2.4 l
ARB-1099 AA	**FIAT**	Diesel	1.6 JTD 1.9 JTD	1.6 l 1.9 l
ARB-1124	**PSA**	Diesel	DW10B, DW10C	2.0 l
ARB-1125	**NISSAN**	Gasoline	CR10DE CR14DE	1.0 l 1.4 l
ARB-1126 A	**NISSAN**	Gasoline	1.6 1.8, 1.8 16v	1.6 l 1.8 l
ARB-1163 E	**VW**	Diesel	1.9 TDI 2.0 TDI	1.9 l 2.0 l
ARB-1168 B/VK108	**PSA** **FIAT** **FORD** **MAZDA** **MINI**	Diesel Diesel Diesel Diesel Diesel	DV4 DV6 1.6 D Multijet 1.4 TDCi 1.6 TDCi 1.4 CD 1.6 DI Turbo Cooper D	1.4 l 1.6 l 1.6 l 1.4 l 1.6 l 1.4 l 1.6 l 1.6 l
ARB-1176 A	**PSA** **FIAT** **LANCIA**	Diesel Diesel Diesel	DW8 DW10 DW12 1.9 D 2.0 JTD 2.2 JTD 2.0 JTD 2.2 JTD	1.9 l 2.0 l 2.2 l 1.9 l 2.0 l 2.2 l 2.0 l 2.2 l
ARB-1195	**PSA** **FIAT** **LANCIA** **RENAULT**	Gasoline Gasoline Gasoline Gasoline	ES (V6) 3.0 V6 3.0 V6 3.0 V6, 3.0 V6 Sport, 3.0 V6 24v	3.0 l 3.0 l 3.0 l 3.0 l
ARB-1196	**PSA** **FIAT** **LANCIA** **RENAULT**	Gasoline Gasoline Gasoline Gasoline	ES (V6) 3.0 V6 3.0 V6 3.0 V6, 3.0 V6 Sport, 3.0 V6 24v	3.0 l 3.0 l 3.0 l 3.0 l
ARB-1201 A	**PSA**	Gasoline	ES EW7, EW7A EW10, EW10A EW12	3.0 l 1.8 l 1.9 l 2.2 l

Idlers

SKF Reference	Customer's engine references			
	Customer	Fuel	Engine ref	Engine size
ARB-1220/VK9052	**NISSAN**	Diesel	2.5 dCi	2.5 l
	OPEL	Diesel	2.2 DTI	2.2 l
			2.5 DTI, 2.5 CDTI	2.5 l
	RENAULT	Diesel	2.0 dCi	2.0 l
			2.2 dCi	2.2 l
			2.5 dCi	2.5 l
ARB-1224	**PSA**	Diesel	DW10CTED4	2.0 l
ARB-1257 A	**FIAT**	Gasoline	1.6, 1.6 16v	1.6 l
ARB-1258 A	**AUDI**	Diesel	1.9 TDI	1.9 l
	SEAT	Diesel	1.9 SDI, 1.9 TDI	1.9 l
	SKODA	Diesel	1.9 SDI, 1.9 TDI	1.9 l
	VW	Diesel	1.9 SDI, 1.9 TDI	1.9 l
			2,5 TDI	2.5 l
ARB-1266/VK9052	**VW**	Diesel	2.0 PD (2.0 TDI 170), 2.0 CR low	2.0 l
ARB-1267	**VW**	Gasoline	1.6	1.6 l
		Diesel	2.0 CR High	2.0 l
ARB-1268/VK9052	**AUDI**	Diesel	2.0 TDI, 2.0 TDI 16v, 2.0 PD (2.0 TDI 170)	2.0 l
	SEAT	Diesel	2.0 TDI, 2.0 TDI 16v, 2.0 PD (2.0 TDI 170)	2.0 l
	SKODA	Diesel	2.0 TDI, 2.0 TDI 16v, 2.0 PD (2.0 TDI 170)	2.0 l
	VW	Diesel	2.0 TDI, 2.0 TDI 16v, 2.0 PD (2.0 TDI 170)	2.0 l
ARB-1298/VK108	**RENAULT**	Gasoline	2.0 16v	2.0 l
		Diesel	D 55 1.9, D 65 1.9, 1.9 D, 1.9 dT, 1.9 dTi 80, 1.9 dTi 98, 1.9 dCi 80, 1.9 dCi 102	1.9 l
ARB-1302 A/VK108	**RENAULT**	Diesel	1.9 dTi	1.9 l
	OPEL	Diesel	1.9 DTI	1.9 l
ARB-1303	**FIAT**	Diesel	2.0 D	2.0 l
			2.4 D, 2.4 JTD	2.4 l
			2.5 D, 2.5 TD, 2.5 TDI	2.5 l
			2.8 D, 2.8 TDI, 2.8 JTD, 2.8 JTD POXER	2.8 l
	OPEL	Diesel	2.5 D	2.5 l
			2.8 DTI	2.8 l
	PSA	Diesel	2.8 HDI	2.8 l
	RENAULT	Diesel	2.5 D	2.5 l
			2.8 DTI	2.8 l

Idlers

SKF Reference	Customer's engine references			
	Customer	Fuel	Engine ref	Engine size
ARB-1304	**FIAT**	Diesel	2.0 D	2.0 l
			2.4 D, 2.4 TD	2.4 l
			2.5 D	2.5 l
			2.8 JTD, 2.8 JTD POXER	2.8 l
	OPEL	Diesel	2.5 D	2.5 l
	PSA	Diesel	2.8 HDI	2.8 l
	RENAULT	Diesel	2.5 D	2.5 l
ARB-1322	**AUDI**	Diesel	2.5 TDI	2.5 l
	SKODA	Diesel	2.5 TDI	2.5 l
	VW	Diesel	2.5 TDI	2.5 l
ARB-1328	**RENAULT**	Diesel	1.9 dTi, 1.9 dCi	1.9 l
	VOLVO	Diesel	1.9 DI	1.9 l
BB2-2037/VK108	**VW**	Diesel	2.0 CR low	2.0 l
BB2-2038/VK108	**VW**	Diesel	2.0 CR High	2.0 l
BB2-2045/VK108	**AUDI**	Diesel	1.9 TDI 90, 1.9 TDI 110	1.9 l
	SEAT	Diesel	1.9 D, 1.9 SDI, 1.9 TDI, 1.9 TDI 90, 1.9 TDI 110	1.9 l
	SKODA	Diesel	1.9 SDI, 1.9 TDI 90, 1.9 TDI 110	1.9 l
	VW	Diesel	1.9 SDI, 1.9 TDI, 1.9 TDI 90, 1.9 TDI 110	1.9 l
BBL-0002	**AUDI**	Diesel	3.3 TDI quattro	3.3 l

Installing confidence for more than 100 years

Our commitment to the automotive aftermarket

SKF Vehicle Service Market deals with the aftermarket for cars and commercial vehicles all over the world. Our concept is to offer high quality products and premium services to our customers, whether your application involves maintaining vehicles or supplying products to those who do.

As a knowledge engineering company, SKF is much more than a components supplier – our engineers can rely on a century of SKF expertise to improve overall system reliability, safety and efficiency.

Our range of products and services is the result of relentless innovation and constant improvement in the design of all critical components, from engines and electronics to driveline and wheel-end systems. SKF continues to take part in the ongoing endeavour to develop its services and state-of-the-art products.



Notes

Notes

Notes

Download APP for iPad

® SKF is a registered trademark of the SKF Group.

© SKF Group 2013
The contents of this publication are the copyright of the publisher and may not be reproduced (even extracts) unless prior written permission is granted. Every care has been taken to ensure the accuracy of the information contained in this publication but no liability can be accepted for any loss or damage whether direct, indirect or consequential arising out of the use of the information contained herein.

PUB 10/P1 11667/1 EN · July 2013

Certain image(s) used under license from Shutterstock.com

skf.com