# Super-precision axial-radial cylindrical roller bearings

## For applications requiring a higher degree of accuracy and rigidity



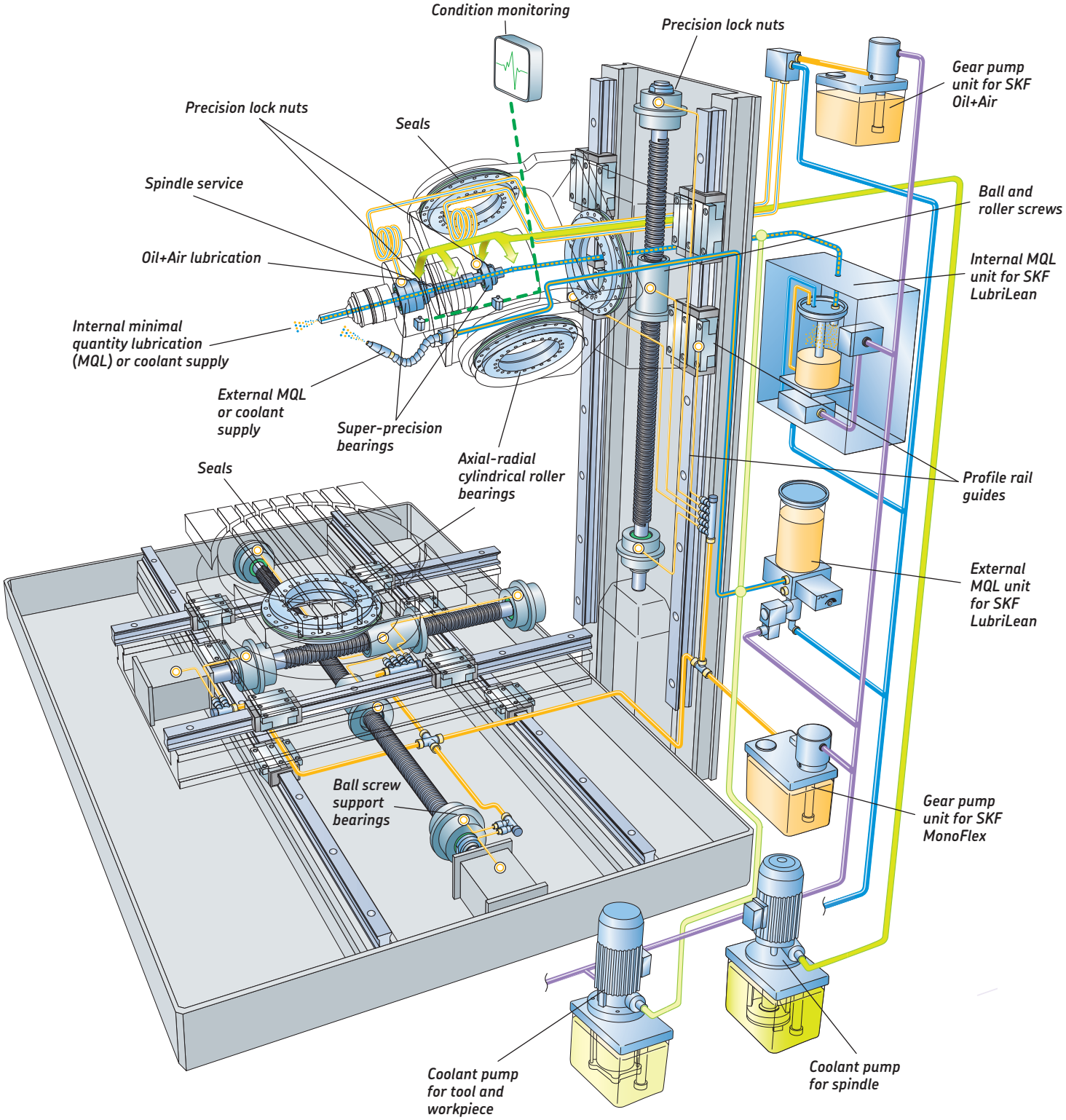
Condition monitoring
Precision lock nuts
Gear pump unit for SKF Oil+Air
Precision lock nuts
Seals
Spindle service
Ball and roller screws
Oil+Air lubrication
Internal MQL unit for SKF LubriLean
Internal minimal quantity lubrication (MQL) or coolant supply
External MQL or coolant supply
Super-precision bearings
Axial-radial cylindrical roller bearings
Seals
Profile rail guides
External MQL unit for SKF LubriLean
Ball screw support bearings
Gear pump unit for SKF MonoFlex
Coolant pump for tool and workpiece
Coolant pump for spindle

# Contents

**SKF – the knowledge engineering company** . . . . . **4**

## A General

**General** . . . . . **7**

## B Technical data

**Selection** . . . . . **9**
- Basic design . . . . . 9
- Tolerances . . . . . 9
- Symbols . . . . . 10
- Stiffness . . . . . 11
- Friction . . . . . 12
- Lubrication . . . . . 12
- Accuracy of mating components . . . . . 12
- Load carrying capacity . . . . . 14
- Static safety factor . . . . . 14
- Equivalent bearing loads . . . . . 14

## C Assembly procedure

**Mounting instructions** . . . . . **15**

## D Product tables

**Designation system** . . . . . **17**

**Super-precision axial-radial cylindrical roller bearings** . . . . . **18**

## E Additional Information

**SKF new generation super-precision bearings** . . . . . **20**

# SKF – the knowledge engineering company






From one simple but inspired solution to a misalignment problem in a textile mill in Sweden, and fifteen employees in 1907, SKF has grown to become a global industrial knowledge leader. Over the years, we have built on our expertise in bearings, extending it to seals, mechatronics, services and lubrication systems. Our knowledge network includes 46 000 employees, 15 000 distributor partners, offices in more than 130 countries, and a growing number of SKF Solution Factory sites around the world.

**Research and development**

We have hands-on experience in over forty industries based on our employees' knowledge of real life conditions. In addition, our world-leading experts and university partners pioneer advanced theoretical research and development in areas including tribology, condition monitoring, asset management and bearing life theory. Our ongoing commitment to research and development helps us keep our customers at the forefront of their industries.

**Meeting the toughest challenges**

Our network of knowledge and experience, along with our understanding of how our core technologies can be combined, helps us create innovative solutions that meet the toughest of challenges. We work closely with our customers throughout the asset life cycle, helping them to profitably and responsibly grow their businesses.

**Working for a sustainable future**

Since 2005, SKF has worked to reduce the negative environmental impact from our operations and those of our suppliers. Our continuing technology development resulted in the introduction of the SKF BeyondZero portfolio of products and services which improve efficiency and reduce energy losses, as well as enable new technologies harnessing wind, solar and ocean power. This combined approach helps reduce the environmental impact both in our operations and our customers' operations.

*SKF Solution Factory makes SKF knowledge and manufacturing expertise available locally to provide unique solutions and services to our customers.*




*Working with SKF IT and logistics systems and application experts, SKF Authorized Distributors deliver a valuable mix of product and application knowledge to customers worldwide.*



# Our knowledge – your success

***SKF Life Cycle Management is how we combine our technology platforms and advanced services, and apply them at each stage of the asset life cycle, to help our customers to be more successful, sustainable and profitable.***

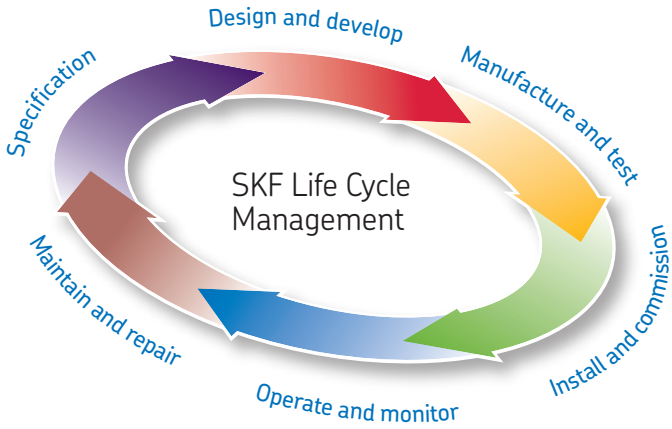


### Working closely with you

Our objective is to help our customers improve productivity, minimize maintenance, achieve higher energy and resource efficiency, and optimize designs for long service life and reliability.

### Innovative solutions

Whether the application is linear or rotary or a combination, SKF engineers can work with you at each stage of the asset life cycle to improve machine performance by looking at the entire application. This approach doesn't just focus on individual components like bearings or seals. It looks at the whole application to see how each component interacts with each other.

### Design optimization and verification

SKF can work with you to optimize current or new designs with proprietary 3-D modelling software that can also be used as a virtual test rig to confirm the integrity of the design.



***Bearings***
*SKF is the world leader in the design, development and manufacture of high performance rolling bearings, plain bearings, bearing units and housings.*



***Machinery maintenance***
*Condition monitoring technologies and maintenance services from SKF can help minimize unplanned downtime, improve operational efficiency and reduce maintenance costs.*



***Sealing solutions***
*SKF offers standard seals and custom engineered sealing solutions to increase uptime, improve machine reliability, reduce friction and power losses, and extend lubricant life.*



***Mechatronics***
*SKF fly-by-wire systems for aircraft and drive-by-wire systems for off-road, agricultural and forklift applications replace heavy, grease or oil consuming mechanical and hydraulic systems.*



***Lubrication solutions***
*From specialized lubricants to state-of-the-art lubrication systems and lubrication management services, lubrication solutions from SKF can help to reduce lubrication related downtime and lubricant consumption.*



***Actuation and motion control***
*With a wide assortment of products – from actuators and ball screws to profile rail guides – SKF can work with you to solve your most pressing linear system challenges.*

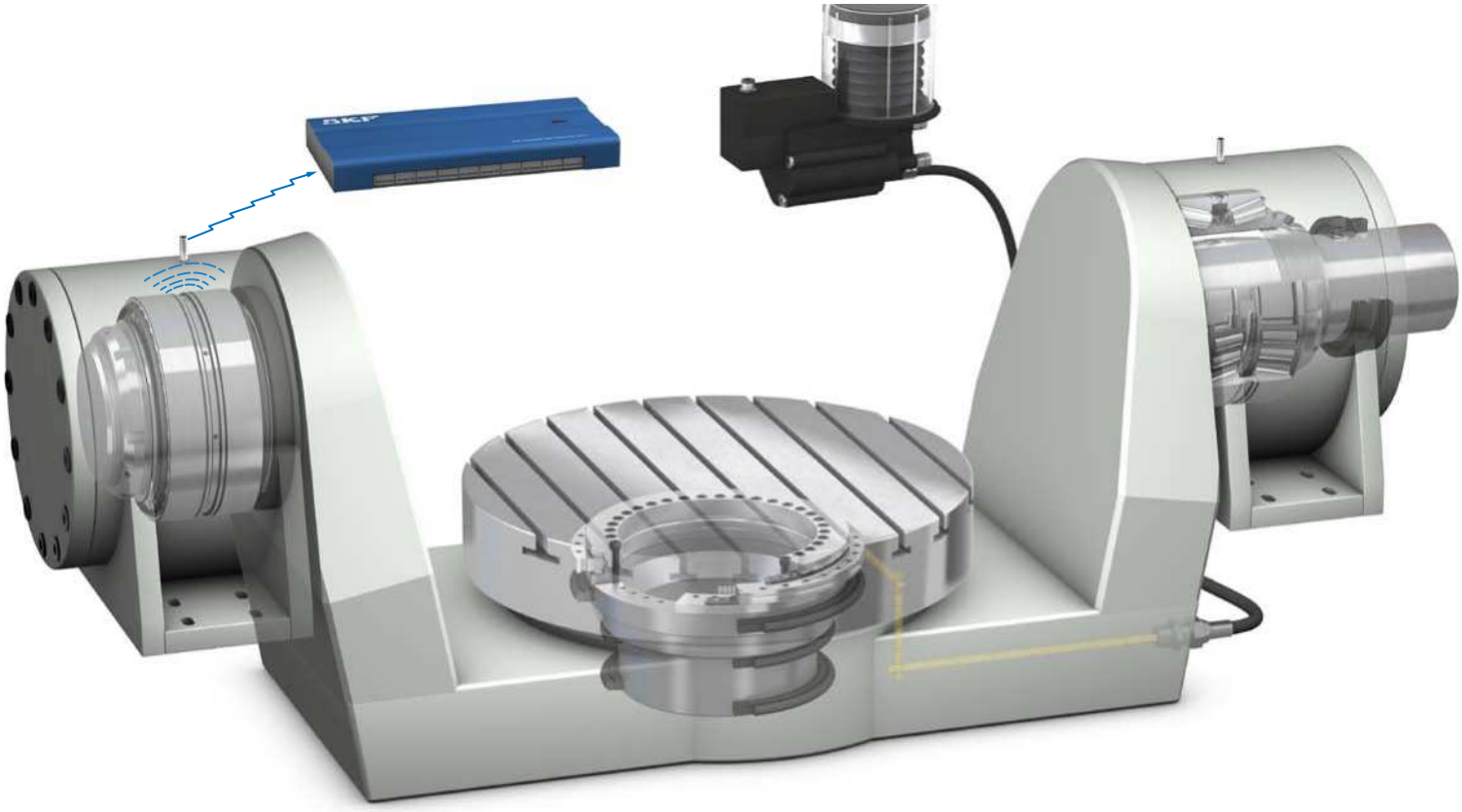

***Application example of SKF super-precision axial radial cylindrical roller bearings in a swivelling table***
*SKF range of solutions for swivelling tables also includes tapered roller bearings, sealings, lubrication systems (SKF Compact Greaser), condition monitoring products (SKF Machine Tool Observer MTx) and maintenance products (i.e. SKF low temperature, extremely high speed bearing grease LGLT 2)*

# General



## SKF for the machine tool industry

SKF is a worldwide supplier of bearings, seals, lubrication systems and condition monitoring devices for the machine tool industry.

To support our full line of super-precision bearing products, we can now provide axial/radial cylindrical roller bearings.

These bearings are commonly used to support rotating tables, indexing tables and milling heads.

Their internal design, together with close tolerance manufacturing processes, enable these bearings to attain better than P4 running accuracy.

This brochure presents the range of this newest bearing series. The data is based on current production.

However, refinements in both the design and manufacturing processes may result in changes.

The units used in this brochure are in accordance with ISO (International Organization for Standardization) standard 1000:1992.

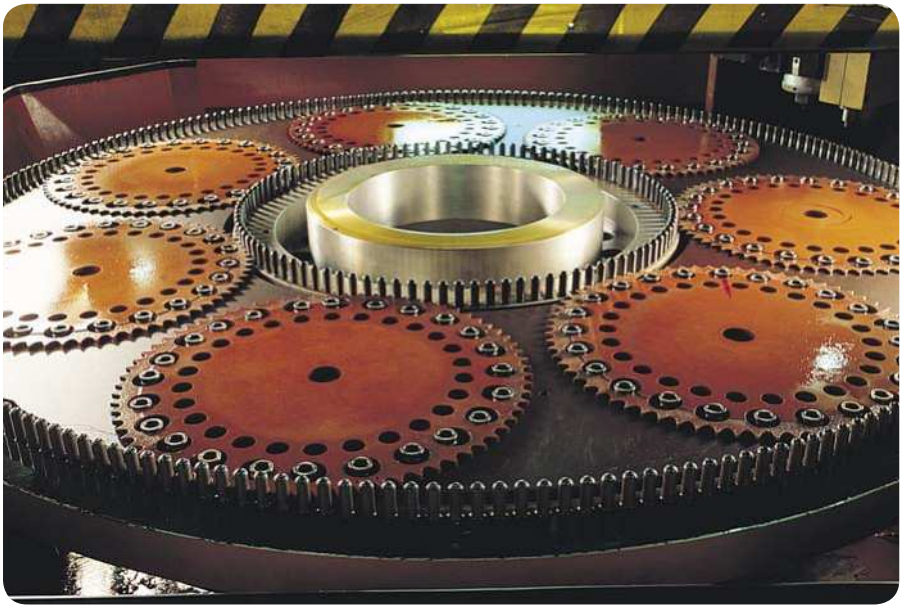

*Face honing machine rotating table, typical application for axial-radial cylindrical roller bearings*



*A collection of SKF super-precision bearings*

# Technical data



## Selection

### Basic design

SKF axial-radial cylindrical roller bearings are suitable for arrangements that have simultaneously acting (radial and axial) loads as well as moment loads. They are an excellent bearing solution for applications such as rotary tables and indexing heads of milling or drilling machines.

The standard bearing consists of an "L" shaped ring with an integral locating washer, an outer ring, two thrust roller and cage assemblies and a full complement row of rollers to accommodate radial loads. (→ **figs. 1** and **2** on **page 15**)

These bearings are available with or without grease.

- The standard bearing does not contain lubricant and must be adequately lubricated with either grease or oil through the lubrication holes provided in the bearing rings.
- Bearings that are pregreased at the factory (suffix G) contain a grease that provides proper lubrication at high or slow speeds.

Pre-greased bearings have 50% of the free-space within the bearing. This avoids a temperature rise that could result from overfilling the bearing.

### Tolerances

SKF axial-radial cylindrical roller bearings are produced to the tolerances provided in **table 1** on **page 10.**

The symbols used in the tolerance table are explained on **page 10.**

Maximum and minimum values quoted represent the allowable deviation from the nominal dimensions listed in the product tables.



Table 1

**Tolerances for axial-radial cylindrical roller bearings**

**Inner ring**

| d | | $\Delta_{ds}$ | | $V_{dp}$ | $V_{dmp}$ | $\Delta_{Hs}$ | | $\Delta_{H1s}$ | | $K_{ia}$ | $S_i$ |
|---|---|---|---|---|---|---|---|---|---|---|---|
| over | incl | high | low | max | max | high | low | high | low | max | max |
| mm | | µm | | µm | µm | µm | | µm | | µm | µm |
| **50** | **80** | 0 | –9 | 5 | 3,5 | 0 | –175 | 25 | –25 | 3 | 3 |
| **80** | **120** | 0 | –10 | 6 | 4 | 0 | –175 | 25 | –25 | 3 | 3 |
| **120** | **150** | 0 | –13 | 8 | 5 | 0 | –175 | 30 | –30 | 3 | 3 |
| **150** | **180** | 0 | –13 | 8 | 5 | 0 | –175 | 30 | –30 | 4 | 4 |
| **180** | **250** | 0 | –15 | 9 | 6 | 0 | –200 | 30 | –30 | 4 | 4 |
| **250** | **315** | 0 | –18 | 11 | 8 | 0 | –400 | 40 | –40 | 6 | 6 |
| **315** | **400** | 0 | –23 | 14 | 10 | 0 | –400 | 50 | –50 | 6 | 6 |
| **400** | **500** | 0 | –27 | 17 | 12 | 0 | –450 | 60 | –60 | 6 | 6 |
| **500** | **630** | 0 | –33 | 20 | 14 | 0 | –500 | 75 | –75 | 10 | 10 |
| **630** | **800** | 0 | –40 | 24 | 16 | 0 | –700 | 100 | –100 | 10 | 10 |
| **800** | **1 000** | 0 | –50 | 30 | 20 | 0 | –850 | 120 | –120 | 12 | 12 |

**Outer ring**

| D | | $\Delta_{Ds}$ | | $V_{Dp}$ | $V_{Dmp}$ | $K_{ea}$ | $S_e$ |
|---|---|---|---|---|---|---|---|
| over | incl | high | low | max | max | max | max |
| mm | | µm | | µm | µm | µm | µm |
| **120** | **150** | 0 | –11 | 7 | 5 | Values are identical to those for inner ring of same bearing | |
| **150** | **180** | 0 | –13 | 8 | 5 | | |
| **180** | **250** | 0 | –15 | 8 | 6 | | |
| **250** | **315** | 0 | –18 | 10 | 7 | | |
| **315** | **400** | 0 | –20 | 11 | 8 | | |
| **400** | **500** | 0 | –23 | 14 | 9 | | |
| **500** | **630** | 0 | –28 | 17 | 11 | | |
| **630** | **800** | 0 | –35 | 20 | 13 | | |
| **800** | **1 000** | 0 | –45 | 26 | 17 | | |
| **1 000** | **1 250** | 0 | –55 | 34 | 20 | | |

## Symbols

d Nominal bore diameter

$\Delta_{ds}$ Deviation of a single bore diameter from the nominal

$V_{dp}$ Bore diameter variation; difference between the largest and smallest single bore diameters in one plane

$V_{dmp}$ Mean bore diameter variation; difference between the largest and smallest mean bore diameters of one ring

D Nominal outside diameter

$\Delta_{Ds}$ Deviation of single outside diameter from the nominal

$V_{Dp}$ Outside diameter variation; difference between the largest and smallest single outside diameter in one plane

$V_{Dmp}$ Mean outside diameter variation; difference between the largest and smallest mean outside diameter of one ring

$\Delta_{Hs}$ Deviation of single bearing height

$\Delta_{H1s}$ Deviation of single cross section height

$K_{ia}$,$K_{ea}$ Radial runout of assembled bearing inner ring and assembled bearing outer ring respectively

$S_i$ Thickness variation, measured from the middle of the raceway to the back (seat) face of the shaft washer (axial run-out)

$S_e$ Thickness variation, measured from the middle of the raceway to the back (seat) face of the housing washer (axial run-out)

## Stiffness

Due to the large number of rollers and the line contact between them and the raceways, there is a minimal amount of elastic deformation. To provide additional stiffness, rollers are calibrated during assembly so that the appropriate preload will be achieved once installation is complete. Appropriate preload increases bearing service life, stiffness and running accuracy while reducing noise levels. When an axial load is applied to an axial-radial cylindrical roller bearing, the roller row that does not transmit the axial load will be subjected to a reduced preload as a result of axial deflection. When the external axial load is large enough, the roller row becomes axially unloaded.

As a result of the closely controlled preload, axial and radial loads and tilting moments can be considered approximately constant. Stiffness values are listed in **table 2** together with the preload values and the axial unloading force for each bearing size.

**Table 2**

**Axial-radial cylindrical roller bearings preload and stiffness**

| Bearing type | Axial preload [1] | Axial unloading force [1] | Axial stiffness [2] | Radial stiffness [2] | Moment stiffness [2] |
|---|---|---|---|---|---|
| – | kN | | kN/µm | | kNm/mrad |
| **NRT 80 A** | 1,3 | 2,8 | 4,9 | 3,1 | 7,0 |
| **NRT 100 A** | 1,7 | 3,8 | 7,2 | 3,7 | 15 |
| **NRT 120 A** | 1,9 | 4,3 | 8,1 | 4,5 | 22 |
| **NRT 150 A** | 2,2 | 4,8 | 9,0 | 5,5 | 35 |
| **NRT 180 A** | 2,5 | 5,5 | 10,3 | 5,8 | 53 |
| **NRT 200 A** | 2,8 | 6,2 | 11,6 | 6,5 | 73 |
| **NRT 260 A** | 7,2 | 16 | 14,5 | 8,3 | 150 |
| **NRT 325 A** | 12 | 26 | 28,6 | 8,9 | 413 |
| **NRT 395 A** | 14 | 30 | 33,6 | 10,6 | 672 |
| **NRT 460 A** | 16 | 34 | 38,5 | 12,1 | 1 036 |
| **NRT 580 A** | 25 | 55 | 43,5 | 18,6 | 1 838 |
| **NRT 650 A** | 27 | 59 | 60 | 17,2 | 3 209 |
| **NRT 850 A** | 47 | 103 | 77 | 22,4 | 7 011 |

[1] These values are intended as average
[2] Stiffness values refer to the rolling element set

## Friction

The friction in axial-radial cylindrical roller bearings, as with other bearings, depends on different factors, the most important being the loads acting on the bearing, the bearing type and size, the quantity and properties of the lubricant and the operating speed. For example, friction increases as the viscosity of the lubricant increases. Similarly, as loads increase, so does friction. Bearing preload, which can be affected during the installation process, can substantially increase friction and reduce bearing service life if the attachment bolts are not torqued to the values provided in the section "Mounting instructions".

**Table 3** provides the value of the friction torque for each bearing measured in functional tests.

Those values are statistical and must be regarded as guidelines only. They have been measured under the following operating conditions:

- Bearings lubricated with special grease kinematic viscosity 150 mm²/s at 40 °C
- Rotational speed 5 r/min
- Ambient temperature 30 to 40 °C

**Table 3**

**Friction torque values for axial-radial cylindrical roller bearings**

| Bearing type | Friction torque * $C_{RL}$ |
|---|---|
| – | Nm |
| NRT 80 A | 3 |
| NRT 100 A | 3 |
| NRT 120 A | 6 |
| NRT 150 A | 12 |
| NRT 180 A | 13 |
| NRT 200 A | 14 |
| NRT 260 A | 25 |
| NRT 325 A | 45 |
| NRT 395 A | 55 |
| NRT 460 A | 70 |
| NRT 580 A | 140 |
| NRT 650 A | 200 |
| NRT 850 A | 300 |

* Friction torque values refer to bearing rotating at 5 r/min, bearing lubricated with grease kinematic viscosity 150 mm²/s at 40 °C, bearing temperature between 30 and 40 °C. Friction torque values are statistical and should considered as a guideline only.

## Lubrication

Even though grease can be used to lubricate axial-radial cylindrical roller bearings, oil bath or recirculating oil systems are typically used. The choice is usually based on the speed and operating temperature of the application. When speeds are slow, grease can be used.

Grease or oil can be applied via the holes in the L-shaped ring. Note, however, that if the bearing is over-lubricated, friction and consequently bearing temperature will increase.

## Accuracy of mating components

A high degree of running accuracy and low operating temperatures can only be achieved if both the bearing and its adjacent components are manufactured at similar levels of precision. **Tables 4** and **5** provide the tolerance recommendations for deviations from the nominal dimensions.



Table 4

## Geometrical accuracy for bearing shaft seats

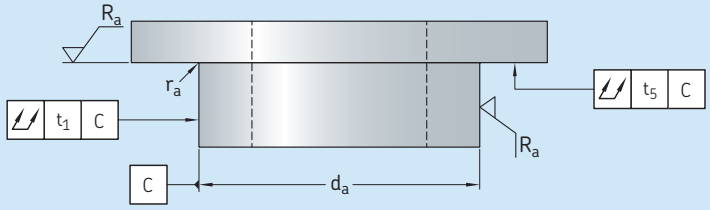


| Shaft diameter | | Tolerance | | | Total radial run-out | Total axial run-out | Surface roughness |
|---|---|---|---|---|---|---|---|
| $d_a$ | | h5Ⓔ | | $r_a$ | $t_1$ | $t_5$ | $R_a$ |
| over | incl | high | low | max | max | max | max |
| mm | | µm | | µm | µm | µm | µm |
| **50** | **80** | 0 | –13 | 0,2 | 3 | 3 | 0,8 |
| **80** | **120** | 0 | –15 | 0,2 | 4 | 4 | 0,8 |
| **120** | **150** | 0 | –18 | 0,2 | 5 | 5 | 0,8 |
| **150** | **180** | 0 | –18 | 0,2 | 5 | 5 | 0,8 |
| **180** | **250** | 0 | –20 | 0,2 | 7 | 7 | 0,8 |
| **250** | **315** | 0 | –23 | 0,5 | 8 | 8 | 0,8 |
| **315** | **400** | 0 | –25 | 0,5 | 9 | 9 | 0,8 |
| **400** | **500** | 0 | –27 | 0,9 | 10 | 10 | 0,8 |
| **500** | **630** | 0 | –32 | 0,9 | 11 | 11 | 0,8 |
| **630** | **800** | 0 | –36 | 1,3 | 13 | 13 | 0,8 |
| **800** | **1 000** | 0 | –40 | 1,3 | 15 | 15 | 0,8 |

Surface roughness $R_a$ in accordance with ISO 1302

Table 5

## Geometrical accuracy for bearing housing seats

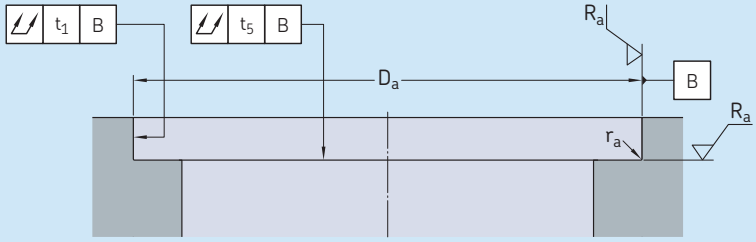


| Housing diameter | | Tolerance | | | Total radial run-out | Total axial run-out | Surface roughness |
|---|---|---|---|---|---|---|---|
| $D_a$ | | j6Ⓔ | | $r_a$ | $t_1$ | $t_5$ | $R_a$ |
| over | incl | high | low | max | max | max | max |
| mm | | µm | | µm | µm | µm | µm |
| **120** | **150** | 18 | –7 | 0,2 | 5 | 5 | 0,8 |
| **150** | **180** | 18 | –7 | 0,5 | 5 | 5 | 0,8 |
| **180** | **250** | 22 | –7 | 0,5 | 7 | 7 | 0,8 |
| **250** | **315** | 25 | –7 | 0,5 | 8 | 8 | 0,8 |
| **315** | **400** | 29 | –7 | 0,5 | 9 | 9 | 0,8 |
| **400** | **500** | 33 | –7 | 0,5 | 10 | 10 | 0,8 |
| **500** | **630** | 34 | –10 | 0,9 | 11 | 11 | 0,8 |
| **630** | **800** | 38 | –12 | 0,9 | 13 | 13 | 0,8 |
| **800** | **1 000** | 44 | –12 | 0,9 | 15 | 15 | 0,8 |
| **1 000** | **1 250** | 52 | –14 | 1,3 | 18 | 18 | 0,8 |

Surface roughness $R_a$ in accordance with ISO 1302

## Load carrying capacity

Axial-radial cylindrical roller bearings can accommodate simultaneously acting radial loads and axial loads from either direction, as well as moment loads. As the bearing is normally preloaded and has to support axial and radial loads working eccentrically relative to the bearing axis, the evaluation of the equivalent bearing loads using the following formula can only be approximate. Therefore, any bearing life calculations done with equivalent bearing loads will be approximate as well.

## Static safety factor

As axial-radial cylindrical roller bearings are precision bearings and, as such, are fitted in machine tools and similar applications, it is of the utmost importance to avoid permanent deformation of the rolling elements and raceways.
The maximum static load should therefore not exceed the equivalent static load obtained from the equation

$P_0 = C_0/s_0$

where
$P_0$ = equivalent static bearing load, kN
$C_0$ = basic static bearing load, kN
$s_0$ = static safety factor

For axial-radial cylindrical roller bearings, a static safety factor equal to 4 should be considered.

## Equivalent bearing loads

For axial-radial cylindrical roller bearings

$P = F_r$ for the radial roller row
$P = F_a$ for the axial roller row

and

$P_0 = F_r$ for the radial roller row
$P_0 = F_a$ for the axial roller row

# Assembly procedure



## Mounting instructions

Bearings should never be stored or transported on edge and should always be laying flat.

The assembly area should be clean and protected against dust, dirt, swarf and moisture. Even under these conditions, SKF recommends keeping the bearing in its original unopened package until it is ready to be mounted.

If the installation process is particularly complex, or if there are any interruptions in the assembly process, the bearing should be protected against any contaminants from entering into the free space of the bearing.

Before assembling the bearing, all components should be carefully cleaned and checked for dimensional accuracy.

The bearing can be mounted with or without a supported L-shaped ring (→ **figs. 1** and **2**). When using a support ring, it should support the ring fully and its height should be in the range of twice the height of the bearing shaft locating washer.

Once the seating surfaces have been cleaned and checked, bearing assembly can begin.

Before fitting the inner ring on the shaft, it is advisable to apply a light coat of thin oil to those parts that will come in contact with the bearing. When mounting, it is important to use the correct tools for the job.

During installation, care must be taken to avoid applying any force through the rolling elements and be sure that all force is applied directly through the ring that is being mounted. To centre the inner ring, the retaining bolts used to secure the bearing during transport must be loosened. Once the inner ring is in position, insert the attachment bolts and tighten them "finger tight" while rotating the unlocated ring. This procedure helps to centre the inner ring. With the inner ring centered, gradually

*Bearing fitted with unsupported L-shaped ring*

Fig. 1

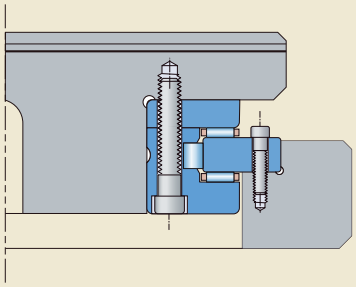

*Bearing fitted with supported L-shaped ring*

Fig. 2

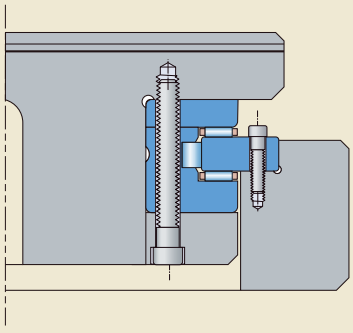

tighten each attachment bolt, using a criss-cross pattern. SKF recommends using a 3-step tightening process, torquing all the bolts to 35% of the specified value, then 70%, then 100%. After the bearing is fitted, the retaining bolts must either be fully retightened or completely removed.

The same procedure can be applied for locating the outer ring i.e: apply a thin coat of light oil to the seating surfaces; mount the bearing/shaft assembly into the housing (→ **fig.2**); install and tighten the mounting bolts "finger tight" while rotating the bearing ring; tighten the mounting bolts in a criss-cross pattern in three stages (→ **fig.3**). **Table 1** provides the tightening torque values for the attachment bolts for the inner and outer rings.

After installation, running accuracy and friction need to be checked. In cases where friction is particularly high, there are 3 possible explanations:

- adjacent parts are not machined to specification
- attachment bolts were over-torqued
- too much grease is in the bearing

To eliminate possible stresses that may have occured during installation, loosen all attachment bolts and re-torque them in a criss-cross pattern using the 3-stage tightening process.

**Table 1**

**Recommended bolt tightening torque**

| Bearing | Tightening torque | Bolt size quality 10,9 |
|---|---|---|
| – | Nm | – |
| **NRT 80 A** | 4,5 | M4 |
| | 8,5 | M5 |
| **NRT 100 A** | 8,5 | M5 |
| **NRT 120 A** | 14 | M6 |
| **NRT 150 A** | 14 | M6 |
| **NRT 180 A** | 14 | M6 |
| **NRT 200 A** | 14 | M6 |
| **NRT 260 A** | 34 | M8 |
| **NRT 325 A** | 34 | M8 |
| **NRT 395 A** | 34 | M8 |
| **NRT 460 A** | 34 | M8 |
| **NRT 580 A** | 68 | M10 |
| **NRT 650 A** | 116 | M12 |
| **NRT 850 A** | 284 | M16 |

Do not use a higher torque value which could increase the bearing preload.

Fig. 1

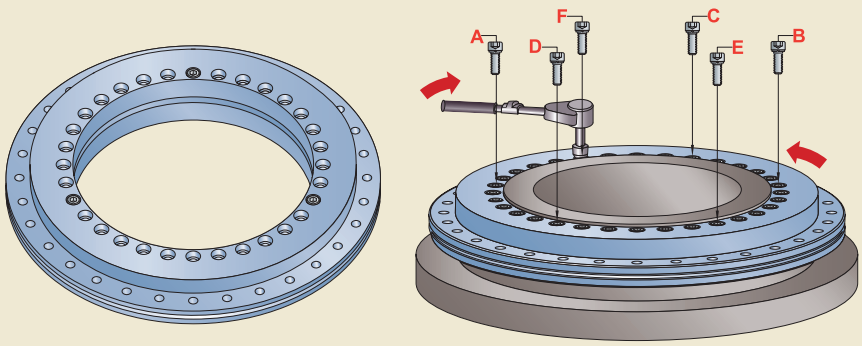


Fig. 2

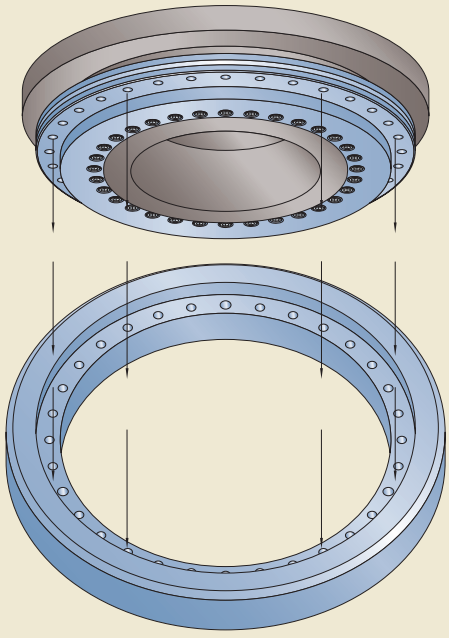

Fig. 3

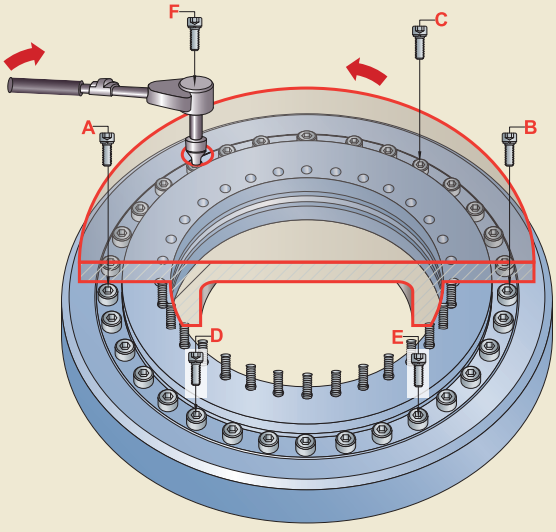

# Product tables

**Designation system for SKF super-precision axial-radial cylindrical roller bearings**

Example:
NRT 260 A/G

| NRT | 260 | A | / | G |
|---|---|---|---|---|

**Bearing series**
**NRT** Axial-radial cylindrical roller bearing

**Bearing size**
**80** 80 mm bore diameter
**to**
**850** 850 mm bore diameter

**Internal design**
**A** Basic internal design
**B** Modified internal design

**Other features**
**G** Bearing greased at the factory





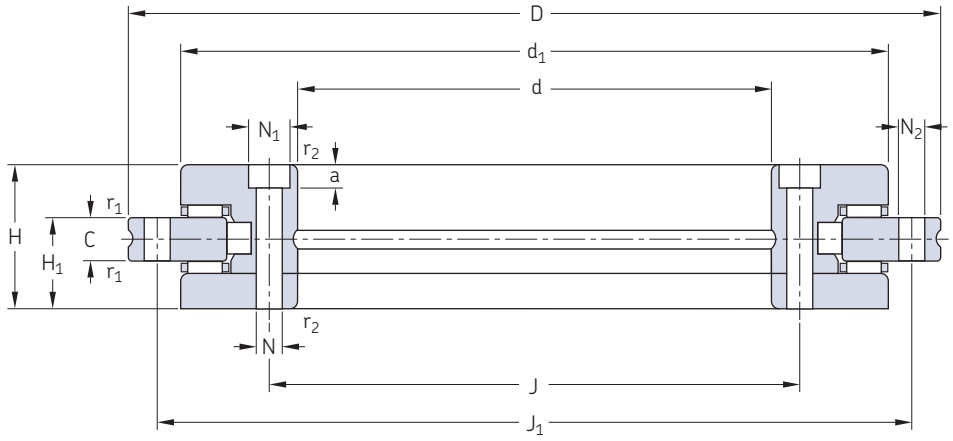


| Principal dimensions | | | | | | | | Basic load ratings | | | | Limiting speeds | | Mass | Suitable rotary table | Designation |
|---|---|---|---|---|---|---|---|---|---|---|---|---|---|---|---|---|
| | | | | | | | | radial | | axial | | Lubrication | | | | |
| $d^{1)}$ | D | H | $H_1$ | C | $d_1$ | $r_1$ min. | $r_2$ min. | dynamic C | static $C_o$ | dynamic C | static $C_o$ | grease | oil | | | |
| mm | | | | | | | | kN | | | | r/min | | kg | mm | – |
| **80** | 146 | 35 | 23,35 | 12 | 130 | 0,3 | 0,3 | 55 | 102 | 37,5 | 200 | 350 | 700 | 2,4 | 200 | **NRT 80 A** |
| **100** | 185 | 38 | 25 | 12 | 160 | 0,6 | 0,3 | 58,3 | 116 | 68 | 390 | 280 | 560 | 4,1 | 260 | **NRT 100 A** |
| **120** | 210 | 40 | 26 | 12 | 184 | 0,6 | 0,3 | 64,4 | 140 | 72 | 440 | 230 | 460 | 5,3 | 315 | **NRT 120 A** |
| **150** | 240 | 40 | 26 | 12 | 214 | 0,6 | 0,3 | 67,1 | 160 | 75 | 480 | 210 | 420 | 6,2 | 350 | **NRT 150 A** |
| **180** | 280 | 43 | 29 | 15 | 244 | 0,6 | 0,3 | 89,7 | 236 | 80 | 560 | 190 | 380 | 7,7 | 400 | **NRT 180 A** |
| **200** | 300 | 45 | 30 | 15 | 274 | 0,6 | 0,3 | 93,5 | 270 | 85 | 630 | 170 | 340 | 9,7 | 500 | **NRT 200 A** |
| **260** | 385 | 55 | 36,5 | 18 | 345 | 0,6 | 0,6 | 108 | 355 | 95 | 780 | 130 | 260 | 18,3 | 630 | **NRT 260 A** |
| **325** | 450 | 60 | 40 | 20 | 415 | 0,6 | 0,6 | 134 | 450 | 153 | 1 660 | 110 | 220 | 25 | 700 | **NRT 325 A** |
| **395** | 525 | 65 | 42,5 | 20 | 486 | 1 | 1 | 147 | 530 | 166 | 1 960 | 90 | 180 | 33 | 800 | **NRT 395 A** |
| **460** | 600 | 70 | 46 | 22 | 560 | 1 | 1 | 201 | 765 | 180 | 2 240 | 80 | 160 | 45 | 1 000 | **NRT 460 A** |
| **580** | 750 | 90 | 60 | 30 | 700 | 1 | 1 | 229 | 965 | 285 | 3 550 | 60 | 120 | 89 | 1 250 | **NRT 580 A** |
| **650** | 870 | 122 | 78 | 34 | 800 | 1 | 1 | 413 | 1 600 | 365 | 5 000 | 55 | 110 | 170 | 1 450 | **NRT 650 A** |
| **850** | 1 095 | 124 | 80,5 | 37 | 1 018 | 1,5 | 1,5 | 473 | 2 120 | 415 | 6 400 | 40 | 80 | 253 | 1 800 | **NRT 850 A** |

[1] Different shaft diameters can be offered upon request. Contact your local SKF representative for more information.

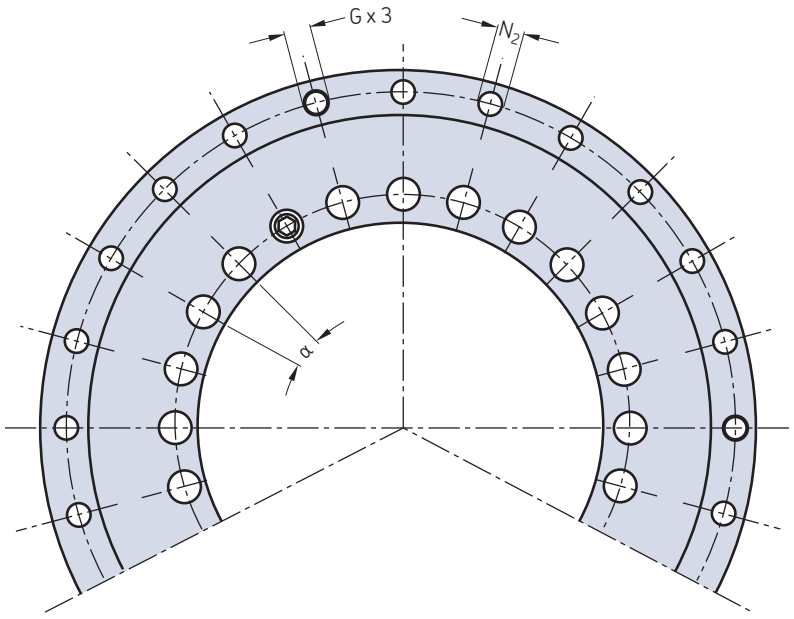


| Attachment holes Inner ring | | | | | | Outer ring | | | | | Pitch | Retaining bolt thread |
|---|---|---|---|---|---|---|---|---|---|---|---|---|
| J | N | $N_1$ | a | Attachment holes nr. | Retaining bolts nr. [1] | $J_1$ | $N_2$ | Attachment holes nr. | Removal thread G | Removal thread nr. | nr. × α° | |
| mm | | | | – | – | mm | | – | | – | – | |
| 92 | 5,6 | 10[2] | 4 | 12 | 3 | 138 | 4,6 | 12 | M5 | 3 | 12×30 | M5 |
| 112 | 5,6 | 10 | 5,4 | 16 | 2 | 170 | 5,6 | 15 | M5 | 3 | 18×20 | M5 |
| 135 | 7 | 11 | 6,2 | 22 | 2 | 195 | 7 | 21 | M8 | 3 | 24×15 | M6 |
| 165 | 7 | 11 | 6,2 | 34 | 2 | 225 | 7 | 33 | M8 | 3 | 36×10 | M6 |
| 194 | 7 | 11 | 6,2 | 46 | 2 | 260 | 7 | 45 | M8 | 3 | 48×7,5 | M6 |
| 215 | 7 | 11 | 6,2 | 46 | 2 | 285 | 7 | 45 | M8 | 3 | 48×7,5 | M6 |
| 280 | 9,3 | 15 | 8,2 | 34 | 2 | 365 | 9,3 | 33 | M12 | 3 | 36×10 | M8 |
| 342 | 9,3 | 15[2] | 8,2 | 34 | 2 | 430 | 9,3 | 33 | M12 | 3 | 36×10 | M8 |
| 415 | 9,3 | 15 | 8,2 | 46 | 2 | 505 | 9,3 | 45 | M12 | 3 | 48×7,5 | M8 |
| 482 | 9,3 | 15 | 8,2 | 46 | 2 | 580 | 9,3 | 45 | M12 | 3 | 48×7,5 | M8 |
| 610 | 11,4 | 18 | 11 | 46 | 2 | 720 | 11,4 | 42 | M12 | 6 | 48×7,5 | M10 |
| 680 | 14 | 20 | 13 | 46 | 2 | 830 | 14 | 42 | M12 | 6 | 48×7,5 | M12 |
| 890 | 18 | 26 | 17 | 58 | 2 | 1 055 | 18 | 54 | M16 | 6 | 60×6 | M16 |

[1] Retaining bolts are screwed into the loose flange.
[2] Milled slots open towards bearing bore

# SKF new generation super-precision bearings

SKF has developed and is continuing to develop a new, improved generation of super-precision bearings. The new assortment delivers improved accuracy and extended bearing service life when compared to previous designs.

## Super-precision angular contact ball bearings

### Bearings in the 718 *(SEA)* series

Bearings in the 718 *(SEA)* series provide optimum performance in applications where a low cross-section and high degree of rigidity, speed and superior accuracy are critical design parameters. They are particularly suitable for machine tool applications, multi-spindle drilling heads, robotic arms, measuring devices, racing car wheels and other precision applications. The standard assortment accommodates shaft diameters ranging from 10 to 160 mm.



### Bearings in the S719 .. B *(HB .. /S)* and S70 .. B *(HX .. /S)* series

High-speed sealed bearings in the S719 .. B *(HB .. /S)* and S70 .. B *(HX .. /S)* series can virtually eliminate the problem of premature bearing failures resulting from contamination. The standard assortment accommodates shaft diameters ranging from 30 to 120 mm. These relubrication-free bearings are particularly suitable for metal cutting and woodworking machines. The bearings are also available in an open variant.



### Bearings in the 719 .. E (*VEB*) and 70 .. E (*VEX*) series

Compared to high-speed B design bearings, high-speed E design bearings have a higher speed capability and can accommodate heavier loads. This desirable combination makes these bearings an excellent choice for demanding applications.

Open bearings in the 719 .. E (*VEB*) series accommodate shaft diameters ranging from 8 to 120 mm; sealed bearings from 20 to 120 mm.

Open bearings in the 70 .. E (*VEX*) series accommodate shaft diameters ranging from 6 to 120 mm; sealed bearings from 10 to 120 mm.

### Bearings in the 719 .. D *(SEB)* and 70 .. D *(EX)* series

For applications where a high load carrying capacity is an additional operational requirement, SKF offers high-capacity bearings in the 719 .. D (*SEB*) and 70 .. D (*EX*) series. The ability of the new design super-precision bearings in these two series to accommodate heavy loads in applications where radial space is often limited, makes them an excellent choice for demanding applications.

Open bearings in the 719 .. D (*SEB*) series accommodate shaft diameters ranging from 10 to 360 mm; sealed bearings from 10 to 150 mm.

Open bearings in the 70 .. D (*EX*) series accommodate shaft diameters ranging from 6 to 240 mm; sealed bearings from 10 to 150 mm.





## Bearings in the 72 .. D *(E 200)* series

High-capacity bearings in the 72 .. D *(E 200)* series offer solutions to many bearing arrangement challenges. Their ability, among others, to provide a high degree of rigidity and accommodate heavy loads at relatively high speeds, is beneficial for a variety of applications. The extended range of bearings in this series now accommodates shaft diameters ranging from 7 to 140 mm. And, there is also a relubrication-free, sealed variant, available on request.

## Bearings made from NitroMax steel

In extremely demanding applications such as high-speed machining centres and milling machines, bearings are frequently subjected to difficult operating conditions such as very high speeds, thin-film lubrication conditions, and contaminated and corrosive environments. To enable longer bearing service life and reduce the costs associated with downtime, SKF has developed a superior high-nitrogen steel.

The SKF assortment of super-precision angular contact ball bearings made from NitroMax steel have ceramic (bearing grade silicon nitride) rolling elements as standard.

# Super-precision cylindrical roller bearings

SKF produces super-precision single row and double row cylindrical roller bearings. The characteristic features of these bearings are a low cross sectional height, high load carrying capacity, high rigidity and high-speed capability.

They are therefore particularly well suited for machine tool spindles where the bearing arrangement must accommodate heavy radial loads and high speeds, while providing a high degree of stiffness.

Single row cylindrical roller bearings are produced in the N 10 series as basic design bearings and as high-speed design bearings.

High-speed single row cylindrical roller bearings in the N 10 series are available with a tapered bore only and for shaft diameters ranging from 40 to 80 mm. Compared to previous high-speed design, they can accommodate a speed increase of up to 30% in grease lubricated applications and up to 15% in oil-air lubricated applications.

Double row cylindrical roller bearings are produced as standard in the NN design and NNU design.



# Super-precision double direction angular contact thrust ball bearings

Double direction angular contact bearings, as their name implies, were developed by SKF to axially locate machine tool spindles in both directions.

The new optimized design of super-precision bearings in the BTW series consists of a set of two single row angular contact thrust ball bearings, arranged back-to-back.

This configuration enables the bearings to accommodate axial loads in both directions while providing a high degree of system rigidity. These bearings can accommodate higher speeds compared to bearings in the former 2344(00) series. The bearings are available for shaft diameters ranging from 35 to 200 mm.

The redesigned high-speed BTM series accommodate higher speeds, anywhere from 6% to 12% depending on the size; minimize heat generation, even at higher speeds; provide high load carrying capacity and maintain a high degree of system rigidity. The range of BTM bearings series has been expanded to accommodate shaft diameters from 60 to 180 mm.



# Super-precision angular contact thrust ball bearings for screw drives

Single direction angular contact thrust ball bearings in the BSA and BSD *(BS)* series are available for shaft diameters ranging from 12 to 75 mm. These bearings are characterized by superior axial stiffness and high axial load carrying capacity.

Double direction angular contact thrust ball bearings in the BEAS series have been developed for machine tool applications where space is tight and easy mounting is required. The bearings are available for shaft diameters ranging from 8 to 30 mm. Bearings in the BEAM series, which can accommodate shaft diameters ranging from 12 to 60 mm, can be bolt-mounted to an associated component.

Cartridge units can also enable simple and quick mounting. Units in the FBSA *(BSDU and BSQU)* series incorporate SKF single direction angular contact thrust ball bearings and can accommodate shaft diameters ranging from 20 to 60 mm.



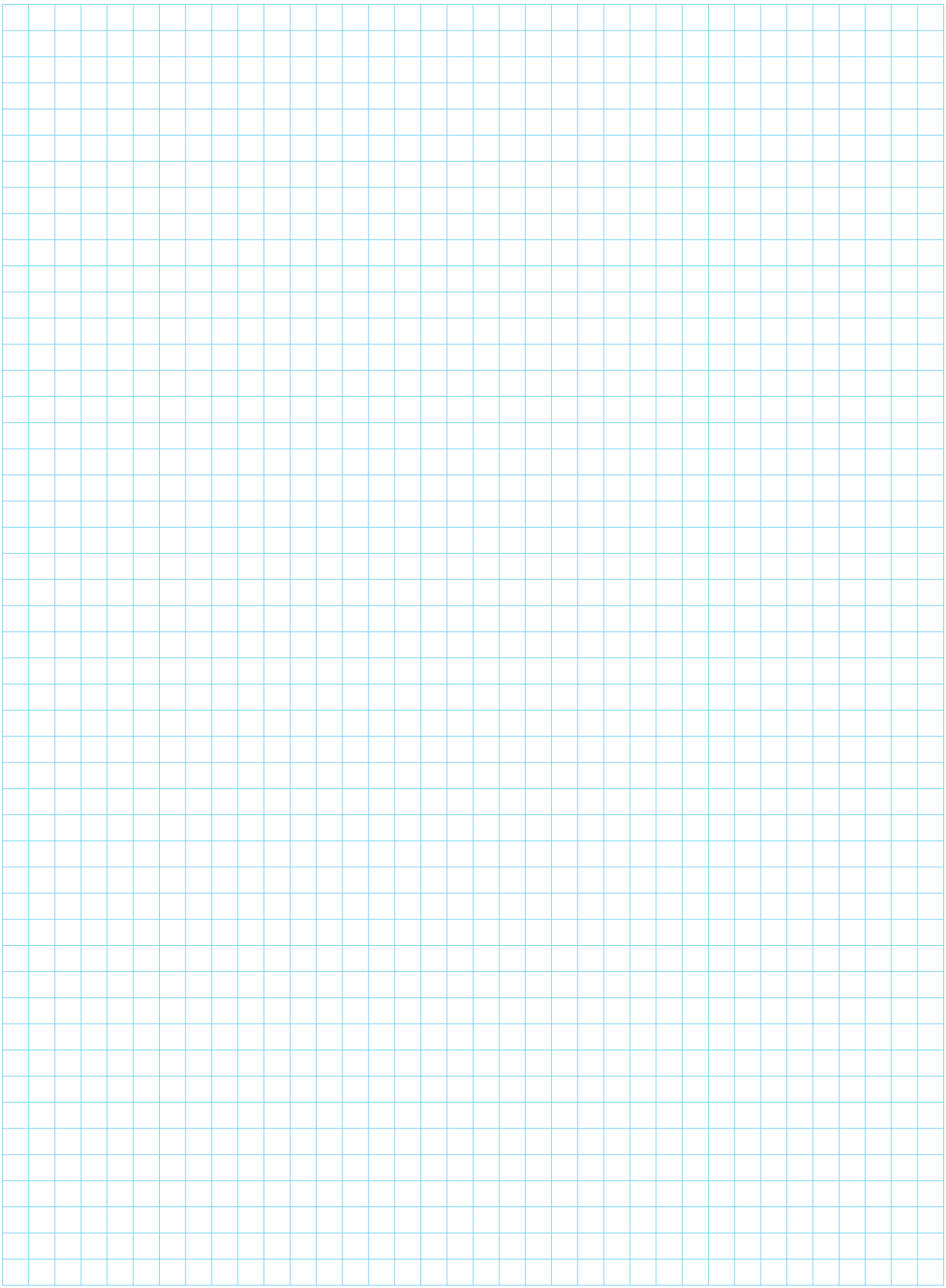

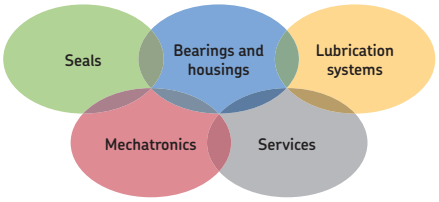


**The Power of Knowledge Engineering**
Combining products, people, and application-specific knowledge, SKF delivers innovative solutions to equipment manufacturers and production facilities in every major industry worldwide. Having expertise in multiple competence areas supports SKF Life Cycle Management, a proven approach to improving equipment reliability, optimizing operational and energy efficiency and reducing total cost of ownership.

These competence areas include bearings and units, seals, lubrication systems, mechatronics, and a wide range of services, from 3-D computer modelling to cloud-based condition monitoring and asset management services.

SKF's global footprint provides SKF customers with uniform quality standards and worldwide product availability. Our local presence provides direct access to the experience, knowledge and ingenuity of SKF people.

® SKF is a registered trademark of the SKF Group.

™ NITROMAX is a trademark of the SKF Group.

© SKF Group 2014
The contents of this publication are the copyright of the publisher and may not be reproduced (even extracts) unless prior written permission is granted. Every care has been taken to ensure the accuracy of the information contained in this publication but no liability can be accepted for any loss or damage whether direct, indirect or consequential arising out of the use of the information contained herein.

**PUB BU/P9 06318/4 EN** · November 2014

